Technical data sheet

Medium Voltage Distribution

LF circuit breaker

SF6 breaking up to 17.5 kV

LF circuit breaker is used to protect and control MV public or industrial distribution network.

LF is an indoor switchgear

- Rated voltage from 7.2 to 17.5 kV
- Rated short-circuit breaking current up to 50 kA
- Rated normal current from 630 to 3150 A.

LF is available in 2 versions:

- **Withdrawable** with MC cassette
- **Fixed:** can be completed by kits and delivered in separate components.

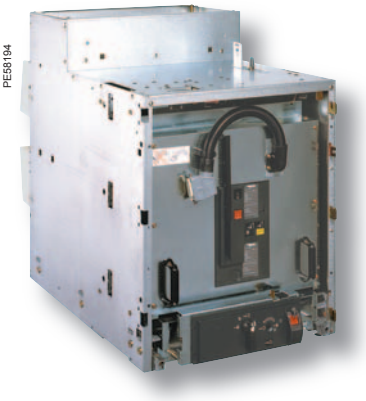

Conformity with standards

- IEC 62 271-1: common specifications for high voltage switchgear and controlgear standards
- IEC 62 271-100: high voltage alternating current circuit breaker
- IEC 62 271-200 (previously IEC 60298): AC metal-enclosed switchgear and controlgear for rated voltages above 1 kV and up to and including 52 kV.

Certification

- By independent laboratories in accordance with ISO/IEC 17025 and EN 45011 standards
- Our factories implement a quality system certified to ISO 9001 : 2000 and ISO 14000 standards by IQNET.

Installation

- Fixed
- Designed for retrofit
- MC cassette can be delivered separately.

Operation

- The operating mechanism is identical to that of the Schneider Electric SF6 MV circuit breaker SF ranges
- Metal protection shutter on cassette
- Racking in/out operation possible in the cubicle with the door closed.
- A position indication device by mechanical indicator (black and white)
- A double contact pressure switch is activated when the gas pressure reduces below:
  - ☐ 1st stage: 0.18 Mpa (relative pressure: 1.8 bar)
  - ☐ 2nd stage: 0.1 Mpa (relative pressure: 1 bar)

Schneider Electric

A full range of accessories and auxiliaries factory-mounted or delivered separately

- Electric motor (M)
- Undervoltage release (YM)
- Shunt opening releases (YO1, YO2)
- Low energy release (MITOP)
- Shunt closing release (YF)
- Auxiliary contacts
- Operations counter
- Locking by padlocks and/or keylocks/sealing.

PE57191

PE57194

Electrical characteristics according to IEC 62271-100

LF fixed				LF1			
Rated voltage	**Ur**	kV 50/60 Hz		7.2		12	
Insulation level							
- power frequency withstand	**Ud**	kV 50 Hz 1min (*)		20		28	
- lightning impulse withstand	**Up**	kV peak		60		75	
Rated current	**Ir**	A	630	■	■	■	■
			1250	■	■	■	■
			2000	–	–	–	–
			2500	–	–	–	–
			3150	–	–	–	–
Short circuit current	**Isc**	kA		25	31.5	25	31.5
Short time withstand current	**Ik/tk**	kA/3 s		25	31.5	25	31.5
Short-circuit making current	**Ip**	Peak kA	50 Hz	63	79	63	79
			60 Hz	65	82	65	82
Rated switching sequence		O-3 min-CO-3 min-CO		■	■	■	■
		O-0.3 s-CO-3 min-CO		■	■	■	■
		O-0.3 s-CO-15 s-CO		■	■	■	■

LF withdrawable (circuit breaker/cassette)				LF1/MC1			
Rated voltage	**Ur**	kV 50/60 Hz		7.2		12	
Insulation level							
- power frequency withstand	**Ud**	kV 50 Hz 1min (*)		20		28	
- lightning impulse withstand	**Up**	kV peak		60		75	
Rated current	**Ir**	A	630	■	■	■	■
			1250	■	■	■	■
			1600	–	–	–	–
			2500	–	–	–	–
Short circuit current	**Isc**	kA	3150	–	–	–	–
Short time withstand current	**Ik/tk**	kA/3 s, kA/1 s		25	31.5	25	31.5
Short-circuit making current	**Ip**	Peak kA		25	31.5	25	31.5
			50 Hz	63	79	63	79
Rated switching sequence		O-3 min-CO-3 min-CO	60 Hz	65	82	65	82
		O-0.3 s-CO-3 min-CO		■	■	■	■
		O-0.3 s-CO-15 s-CO		■	■	■	■
		O-0.3 s-CO-15 s-CO		■	■	■	■

Common characteristics

Operating times		Opening ms	< 54
		Breaking ms	< 70
		Closing ms	< 72
Service temperature	**T**	°C	– 25 to + 40
Mechanical endurance		Class	M2
		Number of switching operations	10,000
Electrical endurance		Class	E2
Capacitive current breaking capacity		Class	C2

(*) Ud 42 kV 50 Hz, 1 min possible
(**) Rated short-circuit breaking duration (tk): 1 s
■ *Available*
– *Not available.*

LF2									LF3											
7.2				12		17.5			7.2				12				17.5			
20				28		38			20				28				38			
60				75		95			60				75				95			
■	■			■		■	■		–	–	–	–	–	–	–	–	–	–	–	
■	■			■		■	■		–	–	–	–	–	–	–	■	–	–	■	
■	■			■		■	■		–	–	–	–	–	–	–	–	–	–	–	
–	–			–		–	–		■	■	■	■	■	■	■	■	■	■	■	
–	–			–		–	–		–	■	■	■	–	■	■	■	■	■	■	
40	50			40		25	31.5		25	31.5	40	50	25	31.5	40	50	25	31.5	40	
40	50			40		25	31.5		25	31.5	40	50	25	31.5	40	50	25	31.5	40	
100	125			100		63	79		63	79	100	125	63	79	100	125	63	79	100	
104	130			104		65	82		65	82	104	130	65	82	104	130	65	82	104	
■	■			■		■	■		■	■	■	■	■	■	■	■	■	■	■	
■	■			■		■	■		■	■	■	■	■	■	■	■	■	■	–	
■	■			■		■	■		■	■	■	■	■	■	■	■	■	■	–	

LF2/MC2									LF3/MC3											
7.2				12			17.5		7.2				12				17.5			
20				28			38		20				28				38			
60				75			95		60				75				95			
–	–	■	■(**)	–	–	■	■	■	–	–	–	–	–	–	–	–	–	–	–	
–	–	■	■(**)	–	–	■	■	■	–	–	–	–	–	–	–	■(**)	–	–	■	
■	■	■	■(**)	■	■	■	■	■	–	–	–	–	–	–	–	–	–	–	–	
–	–	–	–	–	–	–	–	–	■	■	■	■	■	■	■	■	■	■	■	
–	–	–	–	–	–	–	–	–	–	■	■	■	–	■	■	■	■	■	■	
25	31.5	40	50	25	31.5	40	25	31.5	25	31.5	40	50	25	31.5	40	50	25	31.5	40	
25	31.5	40	50(**)	25	31.5	40	25	31.5	25	31.5	40	50	25	31.5	40	50	25	31.5	40	
63	79	100	125	63	79	100	63	79	63	79	100	125	63	79	100	125	63	79	100	
65	82	104	130	65	82	104	65	82	65	82	104	130	65	82	104	130	65	82	104	
■	■	■	■	■	■	■	■	■	■	■	■	■	■	■	■	■	■	■	■	
■	■	■	■	■	■	■	■	■	■	■	■	■	■	■	■	■	■	■	–	
■	■	■	■	■	■	■	■	■	■	■	■	■	■	■	■	■	■	■	–	

Specific applications

Protection of generators and power station auxiliaries

All circuit breakers in the LF range break short circuit currents with an asymmetry of at least 30%.
In cases where the network constant X/R is greater than 45 ms, the asymmetry to be broken is higher; this is often the case of circuit breakers protecting nuclear or thermal power station auxiliaries or circuit breakers that are close to generator sets or large transformers.
Specific tests have been carried out:

Circuit breakers	kV	kA	Asymmetry
LF2	7.2	43.5	50%
LF3	7.2	43.5	50%
	12	40	50%
	17.5	25	100%

Switching and protection of capacitor banks

LF range circuit breakers are particularly well suited to switching and protection of capacitor banks; they are classed C2 according to standard IEC 62271-100.
Tests carried out according to the standard for breaking at 400 A with making and breaking cycles in case of a capacitor bank with a making current of 20 kA.
Additional tests have been carried out: please consult us.

Dimensions and weights

Device

Basic fixed

Circuit breaker		LF1	LF2	LF3
Dimensions (mm)	W	493	554	728
	H	590	590	590
	D	536	536	536
Weight (kg)		106	128	149.5

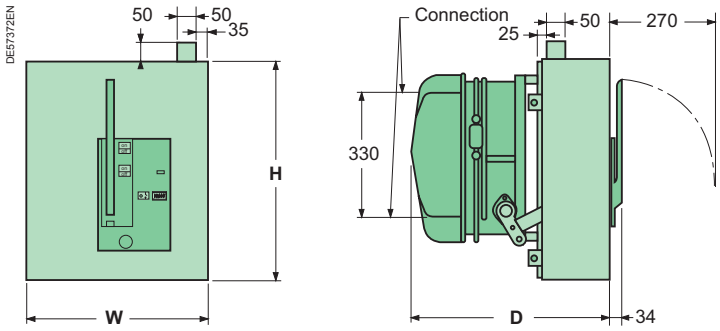

Basic withdrawable

C.B./Cassette		LF1/MC1	LF2/MC2	LF3/MC3
Phase to phase (mm)	E	145	185	240
Dimensions (mm)	W	556	686	886
	H	980	980	980
	D	1223	1223	1223
Weight (kg)		245	285	325 *(1250 A)* 365 *(2500 A)* 435 *(3150 A)*

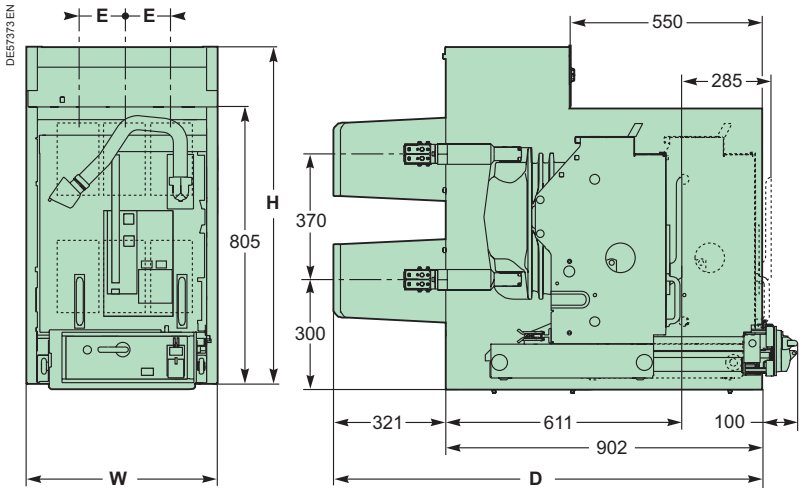

ART.829972 © Schneider Electric Industries SAS - All rights reserved

Schneider Electric 施耐德電機授權經銷商
東技企業股份有限公司
普得企業股份有限公司
總公司:台北市內湖區行愛路68號6樓
電　話:(02)8791-8588
傳　真:(02)8791-9588
E-mail:toyotech@ms37.hinet.net
中辦處:(04)2296-9388
高辦處:(07)227-2133
網　址:www.toyotech.com.tw

Schneider Electric Industries SAS
35,rue Joseph Monier
CS 30323
F - 92506 Rueil Malmaison Cedex

RCS Nanterre 954 503 439
Capital social 896 313 776 €
www.schneider-electric.com

As standards, specifications and designs change from time to time, please ask for confirmation of the information given in this publication.

This document has been printed on ecological paper

Publishing: Schneider Electric Industries SAS
Design: Schneider Electric Industries SAS
Printing: Imprimerie du Pont de Claix/JPF - Made in France

AMTED307008EN

03-2010