EcoStruxure™
Innovation At Every Level

Powerlogic
Easergy P3

Catalog 2019
Network Protection Relays

se.com/easergy

Life Is On Schneider Electric

General Contents

PM106568

Range description	6
Easergy P3 Standard	28
Easergy P3 Advanced	48
Easergy digital experience	78
Additional modules and accessories	88
Schneider Electric service	98
Ordering	104

Take the Easergy P3 further with EcoStruxure

EcoStruxure, Schneider Electric's IoT-enabled, open and interoperable architecture and platform, brings together Connected Products, Edge Control, and Apps, Analytics & Services. EcoStruxure connected products deliver enhanced value around safety, reliability, efficiency, sustainability, and connectivity.

450 000

EcoStruxure systems deployed since 2007 with the support of our 9,000 system integrators

EcoStruxure ready

Efficient asset management

Boost your efficiency and reduce downtime using predictive maintenance tools

24/7 connectivity

Make better informed decisions with real-time data that's available everywhere, anytime

Enhanced safety

Advanced features designed-in based on well-known designs, experience and technology

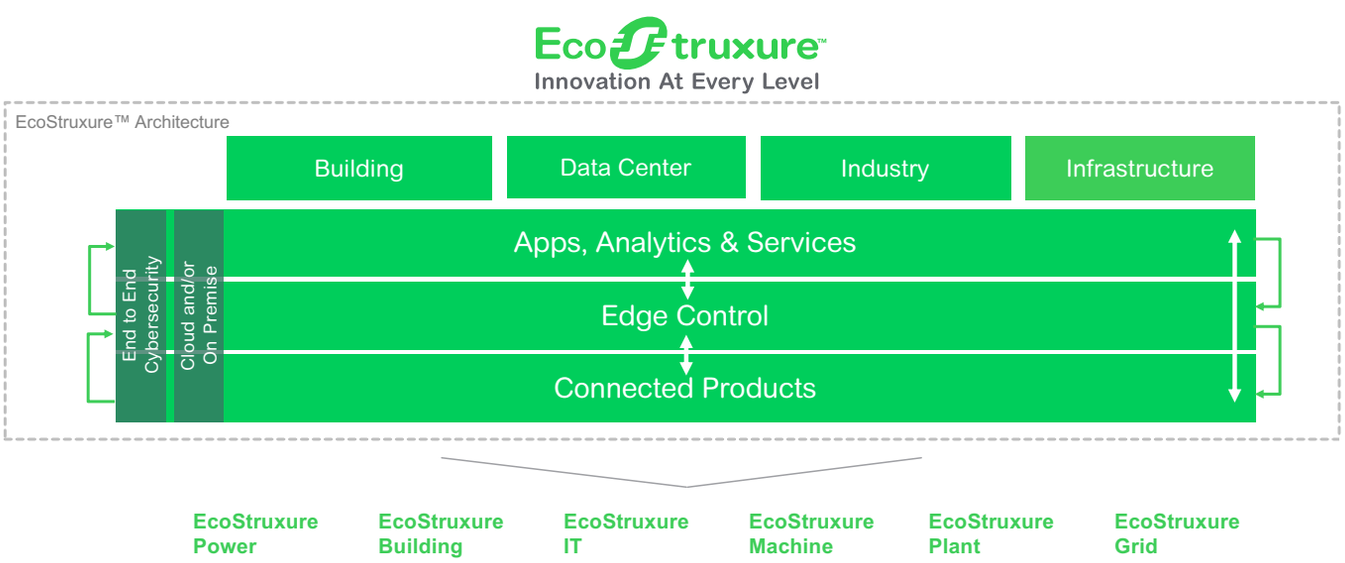

Easergy P3 at a glance

What is Easergy P3?

Easergy P3 is a complete range of protection relays for medium voltage applications, including feeder, motor, transformer, and generator protection. It embeds all the latest communication protocols on serial or Ethernet links.

Based on more than 100 years of experience in network protection relays, Easergy P3 benefits from the reliability of Sepam, MiCOM and Vamp.

Unparalleled Efficiency

- Simple selection and ordering with EcoReal MV
- Simplified configuration with the new eSetup Easergy Pro setting tool
- Faster delivery with on-the-shelf availability of standard configurations

Better Connectivity

- Simpler operation and maintenance with the EcoStruxure™ Power Device app
- 9 communication protocols in one box, including IEC 61850
- Increased number of inputs and outputs for more possibilities

Enhanced Safety

- Embedded arc protection
- Built-in virtual injection testing
- Compliant with international standards (i.e. IEC 60255-1)

Range overview

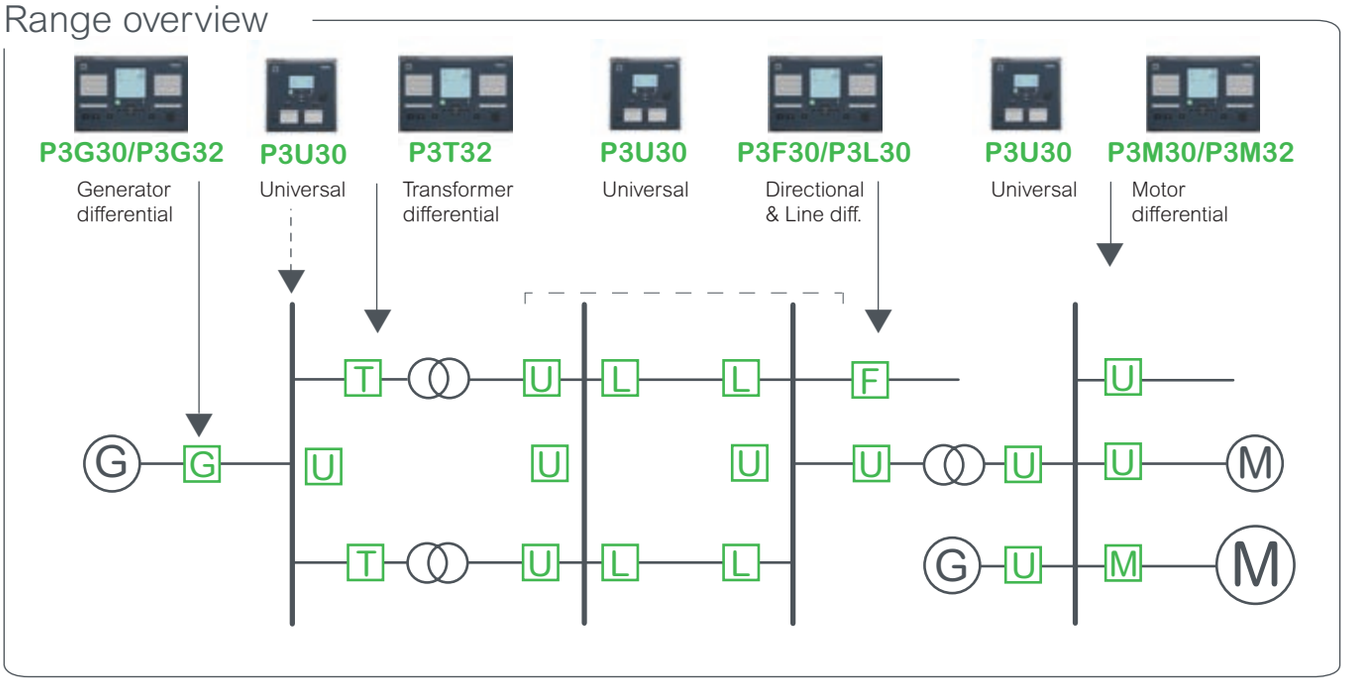

Easergy P3
Range description

Easergy P3
Range description

Overview	8
Selection guide	9
Selection guide by application	12
Arc flash application	12
Feeder/incomer application	13
Motor application	15
Transformer application	16
Generator application	18
Capacitor application	20
Communication Examples of network architectures	21

Overview

PM106572

Easergy P3 Standard

PM106574

Easergy P3 Advanced

Easergy P3 is a family of digital protection relays for distribution networks dedicated to:

- **Buildings and Industry:**
  - Retail
  - Hotels
  - Healthcare
  - Education and research
  - Transportation
  - Industrial buildings
  - Data Center
- **Utilities - Energy distribution**
- **Large sites:**
  - Oil and Gas
  - Mining
  - Mineral and Metals
  - Water

Easergy P3 protection relay is based on proven technology concepts and developed in close cooperation with customers, so it's built to meet your toughest demands. It's available in two sizes to best fit your needs:

- The Easergy P3 Standard combines protection functions such as directional earth fault for feeder and motor protection in a one-box solution.
- The Easergy P3 Advanced features a modular design that allows user-defined conventional protection and arc flash protection solutions in both new and existing power distribution systems.

Easergy products are designed to be user friendly, a feature that is proven in our customer reports day after day. You'll benefit from features that include:

- A complete set of protection functions, related to the application
- Arc detection (Easergy P3 Advanced)
- Dedicated circuit breaker control with single-line diagram, push buttons, programmable function key and LEDs, and a customizable alarm
- Multilingual HMI for customized messaging
- Settings tool relay management software for setting parameters, configuring, and network fault simulation
- Both serial and Ethernet communication, including redundancy
- IEC 61850 standard Ed.1 & Ed.2

Selection guide

Easergy P3 contains

Two main devices, each with specific functions to address your needs in a one-box design, regardless of application.

		Easergy P3 Standard			Easergy P3 Advanced	
				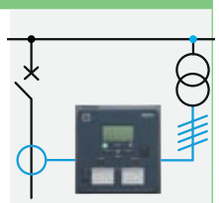	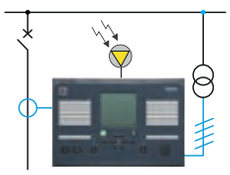	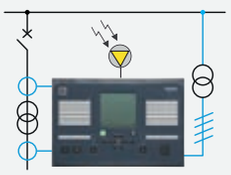
Feeder		P3**U10**	P3**U20**	P3**U30** with directional O/C with voltage protection	P3**F30** with directional P3**L30** line diff. & distance	-
Transformer					-	P3**T32** with differencial
Motor					P3**M30**	P3**M32** with differencial
Generator					P3**G30**	P3**G32** with differencial
Characteristics						
Measuring inputs	Phase current	1/5A CT (x3)			1/5A CT (x3)	1/5A CT (x6)
	Residual current	1/5A CT or 0.2/1A CT			(1/5A+0.2/1A) CT	2 x (1/5A+0.2/1A) CT
	Voltage	VT (x1)		VT (x4)	VT (x4)	VT (x4)
Arc-flash sensor input		-			Loop sensor: 1 Point sensor: 2, 4 or 6 (1) (2)	Loop sensor: 1 Point sensor: 2, 4 or 6 (1)
Digital	Input	2	10	16	6 to 36	6 to 16
	Output	5 + SF	5 + SF	8 + SF	10 to 21 + SF	10 to 13 + SF
Analogue	Input	-	0 or 4 (1)		0 or 4 (1)	
	Output	-	0 or 4 (1)		0 or 4 (1)	
Temperature sensor input		-	0 or 8 or 12 (1)		0 or 8 or 12 (1)	
Front port		USB type B			USB type B	
Nominal power supply		24V dc or 24–48V dc or 48-230V ac/dc (4)			24 to 48V dc or 110-240V ac/dc	
Ambient temperature, in service		-40 to 60°C (-40 to 140°F)			-40 to 60°C (-40 to 140°F)	
Communication						
Rear ports RS232, IRIG/B, RS485, Ethernet		-	●	●	●	●
Protocols	IEC61850 ed1 & ed2	-	●	●	●	●
	IEC 60870-5-101 & 103	-	●	●	●	●
	DNP3 over Ethernet	-	●	●	●	●
	DNP3 serial	-	●	●	●	●
	Modbus serial	-	●	●	●	●
	Modbus over Ethernet	-	●	●	●	●
	Ethernet IP	-	●	●	●	●
	DeviceNet	-	●	●	●	●
	Profibus DP	-	●	●	●	●
	SPAbus	-	●	●	●	●
Redundancy protocols (RSTP/PRP)		-	●	●	●	●
Others						
Control		1 object 1 display	4 objects 4 display	4 objects 8 display	5-6 objects 3-8 display	
Logic (Matrix + Logic equation)		●			●	
Withdrawable CT connector with shorting		●			-	
Remote HMI		-			●	
Hardware dimensions (W/H/D)		171 x 176 x 214(3) mm / 6.73 x 6.93 x 8.43 in			264 x 177 x 208 mm / 10.39 x 6.97 x 8.19 in	

(1) Depends on optional module
(2) P3L30 can have 1 loop or 2 point sensors only
(3) 226 mm (8.90 in) with ring-lug connectors
(4) Check the available power supply range from the device's serial number label

Selection guide

Protection functions	ANSI code	Feeder (P3U)		Motor (P3U)		Advanced (P3x)						
		P3U10 P3U20	P3U30	P3U10 P3U20	P3U30	P3F30	P3L30	P3M30	P3M32	P3G30	P3G32	P3T32
Distance	21	-	-	-	-	-	1	-	-	-	-	-
Under-impedance	21G	-	-	-	-	-	-	-	-	2	2	-
Fault locator	21FL	-	1	-	1	1	1	-	-	-	-	-
Overfluxing	24	-	-	-	-	-	-	-	-	1	1	1
Synchro-check	25	-	2	-	2	2	2	2	2	2	2	2
Undervoltage	27	-	3	-	3	3	3	3	3	3	3	3
Positive sequence undervoltage	27P	-	-	-	-	-	-	-	-	2	2	-
Directional active underpower	32	-	2	-	2	2	2	2	2	2	2	2
Phase undercurrent	37	1	1	1	1	-	-	1	1	-	-	-
Temperature monitoring	38/49T	12 (0)(1)	12 (1)	12 (0)(1)	12 (1)	12 (1)	12 (1)	12 (1)	12 (1)	12 (1)	12 (1)	12 (1)
Loss of field	40	-	-	-	-	-	-	-	-	1	1	-
Under-reactance	21/40	-	-	-	-	-	-	-	-	2	2	-
Negative sequence overcurrent (motor, generator)	46	-	-	2	2	-	-	2	2	2	2	2
Incorrect phase sequence	46	-	-	1	1	-	-	1	1	-	-	-
Cur. unbalance, broken conductor	46BC	1	1	-	-	1	1	-	-	-	-	-
Negative sequence overvoltage protection	47	-	3	-	3	3	3	3	3	3	3	3
Excessive start time, locked rotor	48/51LR	-	-	1	1	-	-	1	1	-	-	-
Thermal overload	49	1	1	1	1	1	1	1	1	1	1	1
Phase overcurrent	50/51	3	3	3	3	3	3	3	3	3	3	3
Earth fault overcurrent	50N/51N	5	5	5	5	5	5	5	5	5	5	5
Breaker failure	50BF	1	1	1	1	1	1	1	1	1	1	1
Switch On To Fault (SOTF)	50HS	1	1	1	1	1	1	1	1	1	1	1
Capacitor bank unbalance	51C	2	2	2	2	2	2	2	2	2	2	2
Voltage dependant overcurrent	51V	-	1	-	1	1	1	-	-	1	1	-
Overvoltage	59	-	3	-	3	3	3	3	3	3	3	3
Capacitor overvoltage	59C	1	1	-	-	1	1	-	-	-	-	-
Neutral voltage displacement	59N	3	3	3	3	2	2	2	2	2	2	2
CT supervision	60	1	1	1	1	1	1	1	1	1	2	2
VT supervision	60FL	-	1	-	1	1	1	1	1	1	1	1
Restricted earth fault (low imped.)	64REF	-	-	-	-	-	-	-	-	-	1	1
Stator earth fault	64S	-	-	-	-	-	-	-	-	1	1	-
Frequent start inhibition	66	-	-	1	1	-	-	1	1	-	-	-
Directional phase overcurrent	67	-	4	-	4	4	4	4	4	4	4	4
Directional earth-fault o/c	67N	3	3	3	3	3	3	3	3	3	3	3
Transient intermittent	67NI	1	1	-	-	1	1	-	-	-	-	-
Magnetizing inrush detection	68F2	1	1	1	1	1	1	1	1	1	1	1
Fifth harmonic detection	68H5	1	1	1	1	1	1	1	1	1	1	1
Pole slip	78PS	-	-	-	-	-	-	-	-	1	1	-
Auto-recloser	79	5	5	-	-	5	5	-	-	-	-	-
Over or under frequency	81	-	2/2	-	2/2	2/2	2/2	2/2	2/2	2/2	2/2	2/2
Rate of change of frequency	81R	-	1	-	1	1	1	1	1	1	1	1
Under frequency	81U	-	2	-	2	2	2	2	2	2	2	2
Lockout	86	1	1	1	1	1	1	1	1	1	1	1
Line differential	87L	-	-	-	-	-	2	-	-	-	-	-
Machine differential	87M	-	-	-	-	-	-	-	2	-	2	-
Transformer differential	87T	-	-	-	-	-	-	-	-	-	-	2
Programmable stages	99	8	8	8	8	8	8	8	8	8	8	8
Arc-flash detection (AFD)		-	-	-	-	8	8	8	8	8	8	8
Cold load pick-up (CLPU)		1	1	1	1	1	1	1	1	1	1	1
Programmable curves		3	3	3	3	3	3	3	3	3	3	3
Setting groups (3)		4	4	4	4	4	4	4	4	4	4	4

(0) No temperature sensors for P3U10 and 12 optional for P3U20
(1) Using external RTD module
(2) P3U10 and P3U20 offer one voltage input. Function availability depends on the connection of the voltage input
(3) Not all protection functions have 4 setting groups. See details in the manual.

Selection guide

	Feeder & Motor (P3U)		Advanced (P3x)						
Control functions	**P3U10 P3U20**	**P3U30**	**P3F30**	**P3L30**	**P3M30**	**P3M32**	**P3G30**	**P3G32**	**P3T32**
Switchgear control and monitoring	1/6	6	6	6	6	6	6	6	6
Switchgear monitoring only	2	2	2	2	2	2	2	2	2
Programmable switchgear interlocking	●	●	●	●	●	●	●	●	●
Local control on single-line diagram	●	●	●	●	●	●	●	●	●
Local control with O/I keys	●	●	●	●	●	●	●	●	●
Local/remote function	●	●	●	●	●	●	●	●	●
Function keys	2	2	2	2	2	2	2	2	2
Custom logic (logic equations)	●	●	●	●	●	●	●	●	●
Control with Mobile application	●	●	●	●	●	●	●	●	●
Measurement									
RMS current values	●	●	●	●	●	●(1)	●	●(1)	●(1)
RMS voltage values	●	●	●	●	●	●	●	●	●
RMS active, reactive and apparent power	-	●	●	●	●	●	●	●	●
Frequency	●	●	●	●	●	●	●	●	●
Fundamental frequency current values	●	●	●	●	●	●(1)	●	●(1)	●(1)
Fundamental frequency voltage values	-	●	●	●	●	●	●	●	●
Fundamental frequency active, reactive and apparent power values	-	●	●	●	●	●	●	●	●
Power factor	-	●	●	●	●	●	●	●	●
Energy values active and reactive	-	●	●	●	●	●	●	●	●
Energy transmitted with pulse outputs	-	●	●	●	●	●	●	●	●
Demand values: phase currents	●	●	●	●	●	●	●	●	●
Demand values: active, reactive, apparent power and power factor	-	●	●	●	●	●	●	●	●
Min and max demand values: phase currents	●	●	●	●	●	●	●	●	●
Min and max demand values: RMS phase currents	●	●	●	●	●	●	●	●	●
Min and max demand values: active, reactive, apparent power and power factor	-	●	●	●	●	●	●	●	●
Maximum demand values over the last 31 days and 12 months: active, reactive, apparent power	-	●	●	●	●	●	●	●	●
Minimum demand values over the last 31 days and 12 months: active, reactive power	-	●	●	●	●	●	●	●	●
Max and min values: currents	●	●	●	●	●	●	●	●	●
Max and min values: voltages	●	●	●	●	●	●	●	●	●
Max and min values: frequency	●	●	●	●	●	●	●	●	●
Max and min values: active, reactive, apparent power and power factor	-	●	●	●	●	●	●	●	●
Harmonic values of phase current and THD	●	●		●	●	●(1)	●	●(1)	●(1)
Harmonic values of voltage and THD	-	●	●	●	●	●	●	●	●
Voltage sags and swells	-	●	●	●	●	●	●	●	●
Logs and Records									
Sequence of event record	●	●	●	●	●	●	●	●	●
Disturbance record	●	●	●	●	●	●	●	●	●
Tripping context record	●	●	●	●	●	●	●	●	●
Monitoring functions									
Trip circuit supervision (ANSI 74)	1	1	1	1	1	1	1	1	1
Circuit breaker monitoring	1	1	1	1	1	1	1	1	1
Relay monitoring	●	●	●	●	●	●	●	●	●

(1) Function available on both sets of CT inputs

Selection guide by application

Arc flash application

Busbar arc protection

• Arc protection, activated by overcurrent and light signals, or light signals alone

Centralized busbar arc protection

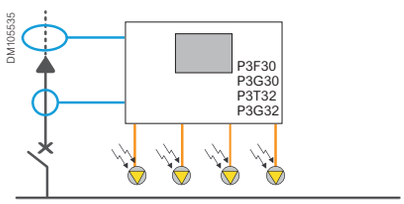

• Up to 4 light point sensors to monitor the busbar

De-centralized busbar arc protection

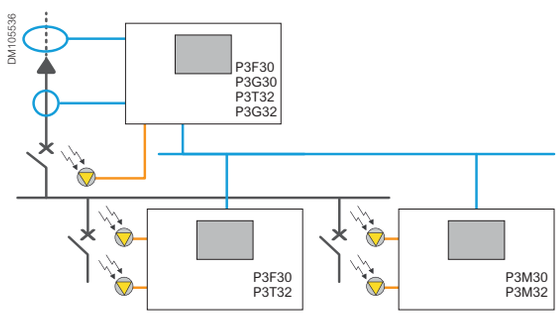

• Up to 4 light point sensors in each relay

• Transmission of light detection signals via digital I/O or IEC 61850 GOOSE messages

Zone arc protection

• Up to 8 arc protection stages in each relay

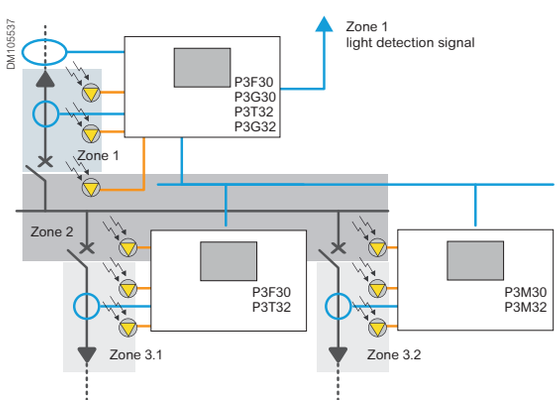

• Light detection in zone 1:
signal sent to upstream relay for tripping

• Light detection in zone 2:
incomer Easergy P3 trips, if fault confirmed by overcurrent

• Light detection in zone 3:
corresponding outgoing Easergy P3 trips, if fault confirmed by overcurrent

Selection guide by application

Feeder/incomer application

Outgoing protection

- **Feeder overcurrent protection**
- **Feeder overload protection**

Protection of low-capacitance feeders in impedance-earthed or solidly-earthed neutral systems

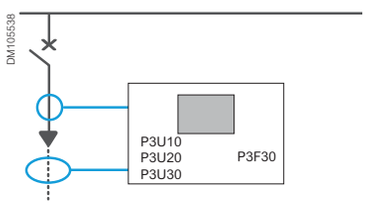

- Feeder earth-fault overcurrent

Protection of high-capacitance feeders in impedance-earthed or compensated or isolated neutral systems

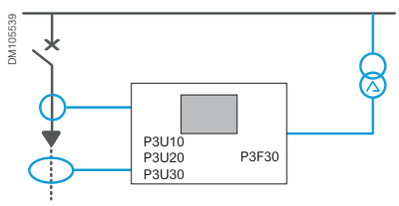

- Directional earth-fault overcurrent
- Transient intermittent earth-fault

Protection of feeders with metering

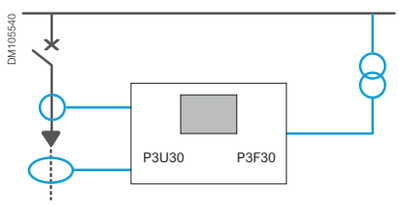

- Power and energy measurement
- Min and max demand values over the last 31 days and 12 months

Incomer protection

- **Busbar overcurrent protection**

Incomer protection without voltage monitoring

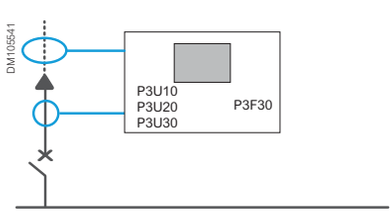

- Earth-fault overcurrent

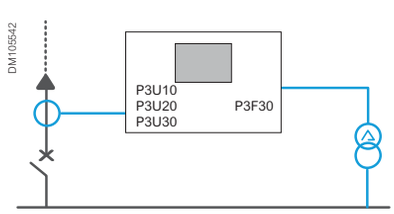

- Neutral voltage displacement protection for isolated system

Incomer protection with voltage and frequency monitoring

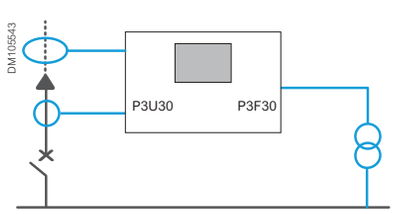

- Under/over voltage
- Frequency, rate of change of frequency

Incomer protection with power quality monitoring

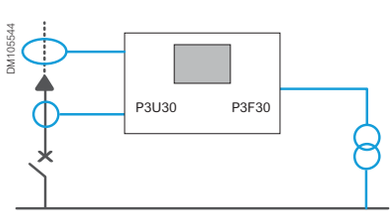

- Voltage and frequency min and max values
- Voltage harmonic values and THD
- Voltage sags and swells

Parallel incomer protection

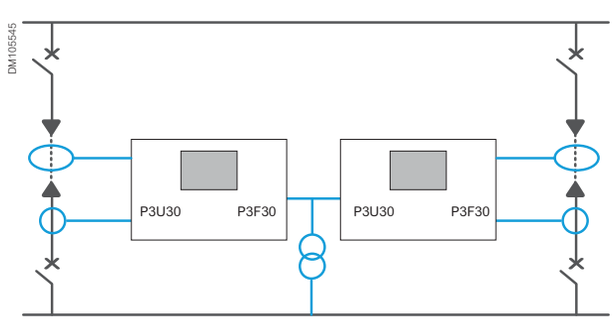

- Directional phase overcurrent
- Directional earth-fault overcurrent

Selection guide by application

Feeder/incomer application

Line protection

- **Overcurrent and earth-fault protection (directional and non-directional)**
- **Feeder overload protection**

Overhead line protection

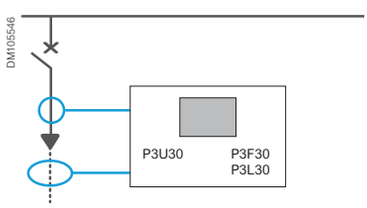

- Recloser
- Feeder fault locator

Incomer protection with fault locator

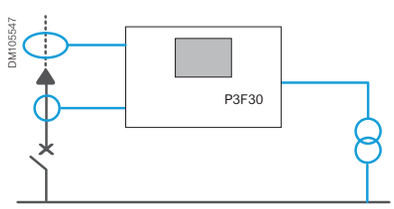

- Incomer fault locator

Line protection with line differential and distance functions

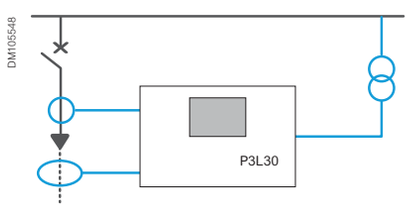

- Line differential protection
- Distance protection

Selection guide by application

Motor application

Motor protection

- **Motor overcurrent and earth-fault overcurrent**
- **Thermal overload**
- **Motor start-up supervision**
- **Motor restart inhibition**

Motor protection without voltage monitoring

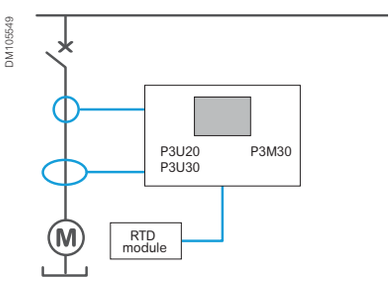

- Temperature measurement (stator, bearings)

Motor protection with voltage monitoring

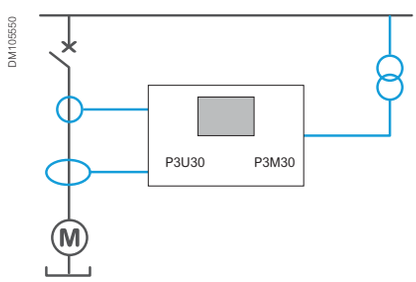

- Undervoltage protection

Motor protection with differential function

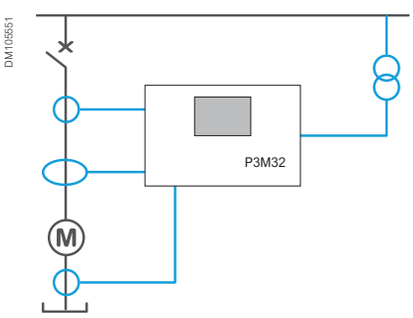

- Differential protection

Motor-transformer unit protection

- **Motor-transformer overcurrent**
- **Transformer earth-fault overcurrent**
- **Thermal overload**
- **Motor start-up supervision**
- **Motor restart inhibition**
- **External trip from thermostat/Buchholz**

Motor-transformer unit protection

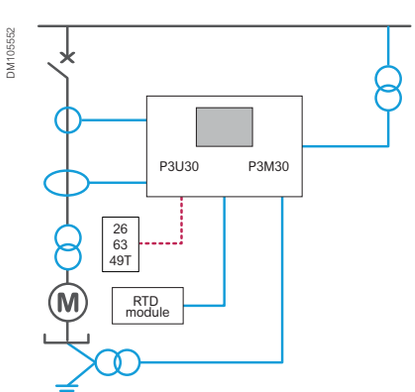

- Temperature measurement (stator, bearings)
- Motor neutral point displacement

Motor-transformer unit protection with differential function

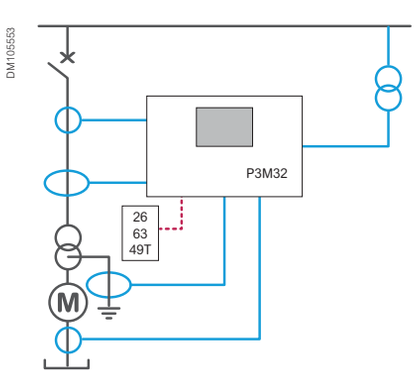

- Differential protection
- Motor earth-fault overcurrent

Selection guide by application

Transformer application

Transformer feeder protection

- **Transformer overcurrent and earth-fault overcurrent protection**
- **Thermal overload protection**
- **External trip from thermostat/Buchholz**

Transformer feeder protection

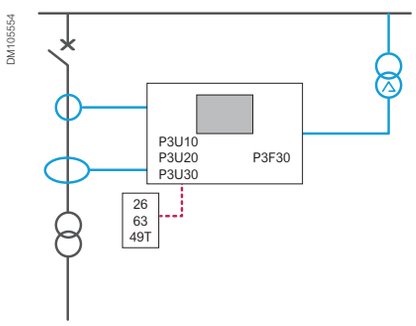

- Directional earth-fault overcurrent for impedance earthed or compensated neutral systems

Transformer feeder protection without voltage monitoring

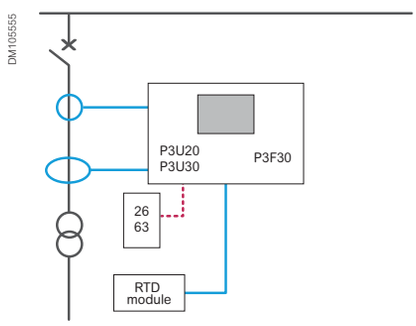

- Temperature measurement (ambient, oil)

Transformer feeder protection with voltage monitoring

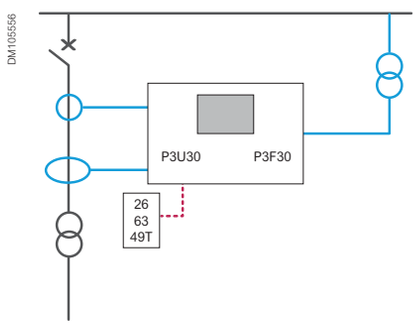

- Over and undervoltage protection

Transformer feeder protection with additional current measurement

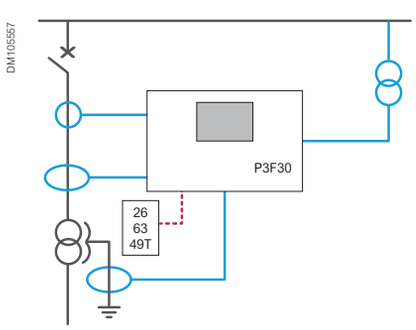

- Tank earth-leakage protection

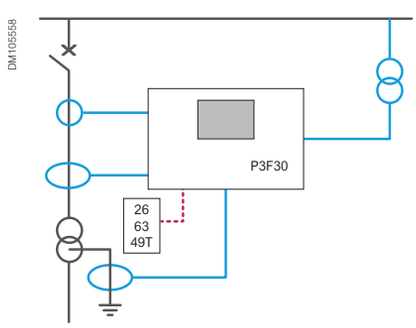

- Earth-fault overcurrent on the secondary side

Transformer feeder protection with differential function

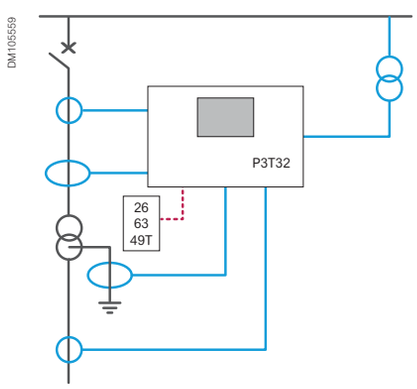

- Differential protection
- Restricted earth-fault protection (high impedance)

Selection guide by application

Transformer application

Transformer incomer protection

- **Busbar overcurrent protection**
- **Inter-trip from primary CB protection**

Transformer incomer protection without voltage monitoring

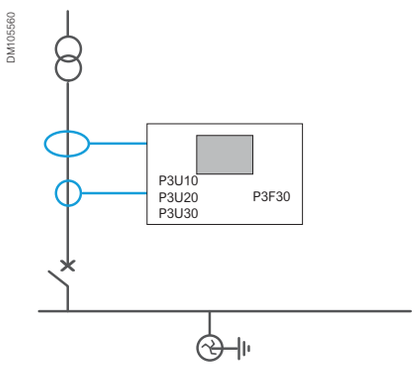

- Transformer earth-fault overcurrent

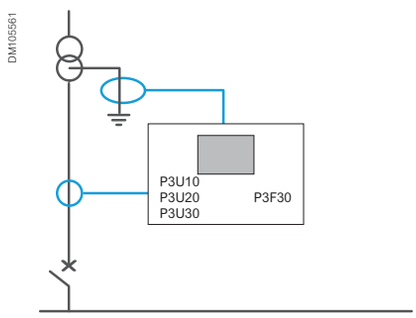

- Earth-fault overcurrent for transformer and back-up protection

Transformer feeder protection with voltage monitoring

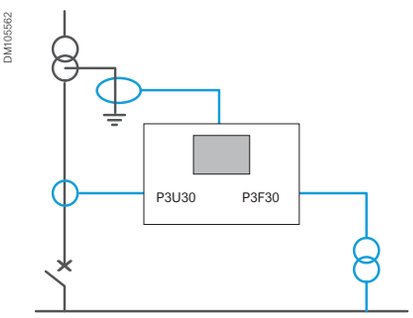

- Over and undervoltage protection
- Power and energy measurement
- Min and max demand values over the last 31 days and 12 months

Parallel transformer incomer protection

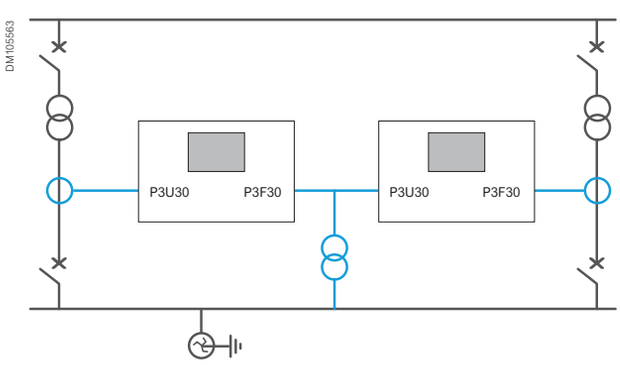

- Directional phase overcurrent

Transformer incomer protection with differential function overcurrent

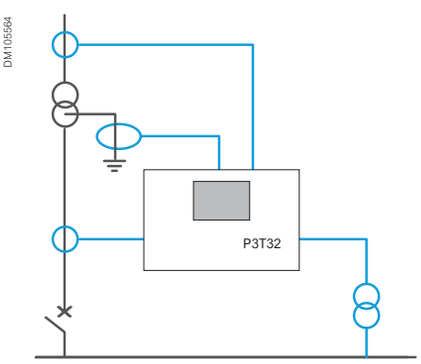

- Transformer differential overcurrent
- Restricted earth-fault overcurrent (high impedance)

Selection guide by application

Generator application

Small generator transformer unit protection

- **Overcurrent protection of the supplied network**
- **Voltage and frequency monitoring**
- **External trip from thermostat/Buchholz**

Protection of a stand-alone generator-transformer unit

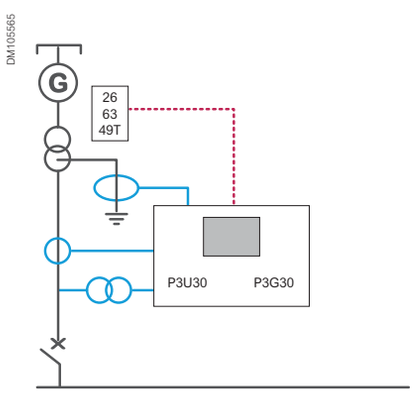

- Earth-fault overcurrent protection of the supplied network
  Note: monitoring of generator insulation must be ensured by another device

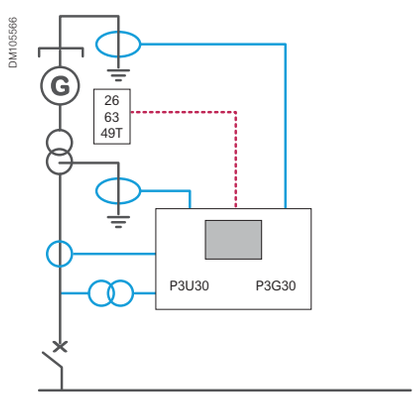

- Earth-fault overcurrent protection of the generator
- Earth-fault overcurrent protection of the supplied network

Protection of a generator-transformer unit coupled to another source

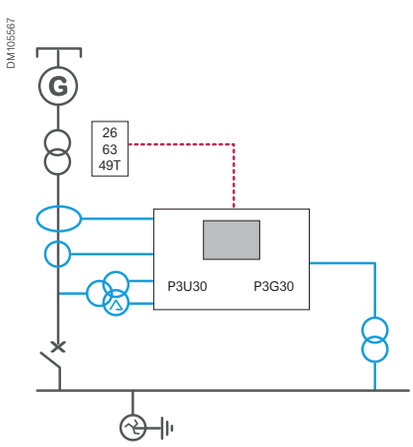

- Earth-fault overcurrent protection of the transformer
- Neutral voltage displacement to detect transformer earth-fault when CB is open
- Synchro-check
  Note: monitoring of generator insulation must be ensured by another device

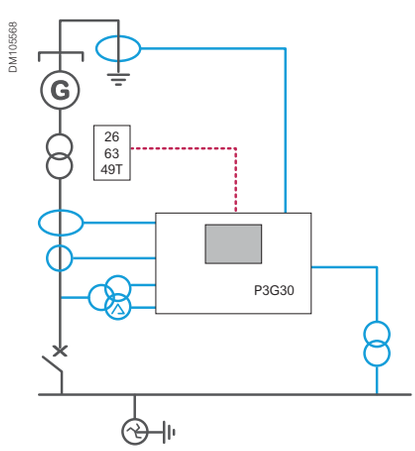

- Earth-fault overcurrent protection of the generator and the transformer
- Neutral voltage displacement to detect transformer earth-fault when CB is open
- Synchro-check

Selection guide by application

Generator application

Mid-size generator protection

- **Under-impedance**
- **Loss of field**
- **Voltage and frequency monitoring**

Protection of a generator coupled to another source

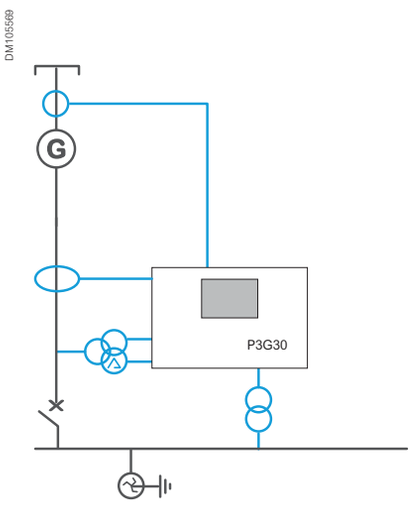

- Earth-fault overcurrent protection of the generator when coupled
- Neutral voltage displacement to detect generator earth-fault when CB is open
- Synchro-check

Generator protection with differential function

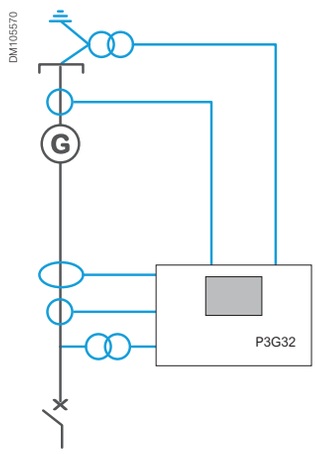

- Stator earth-fault detection
- Differential protection

Generator-transformer unit protection with differential function

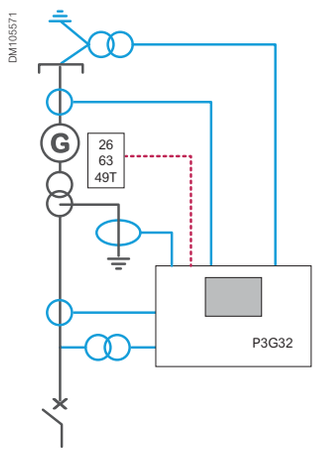

- Stator earth-fault detection
- Differential protection
- Restricted earth-fault protection (high impedance)

Selection guide by application

Capacitor application

Capacitor bank protection

- **Capacitor bank overcurrent and earth-fault protection**
- **Capacitor bank overload protection**

Capacitor bank protection without voltage monitoring

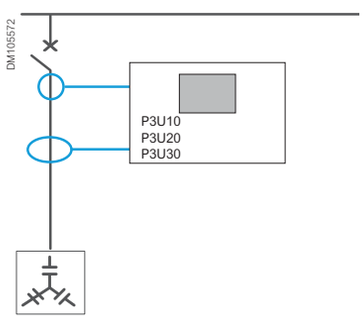

- Capacitor overvoltage protection, based on current measurement and harmonics
- Current harmonic values and THD

Capacitor bank protection with voltage monitoring

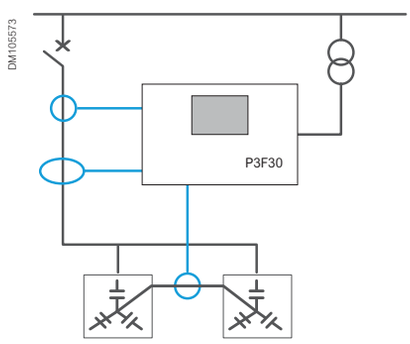

- Capacitor bank unbalance
- Overvoltage
- Current and voltage harmonic values and THD

Protection of harmonic filters

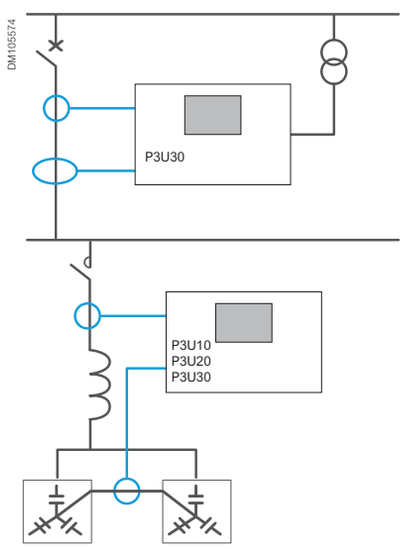

- Overvoltage
- Capacitor bank unbalance
- Capacitor overvoltage protection, based on current measurement and harmonics
- Current harmonic values and THD

Communication

SCADA system

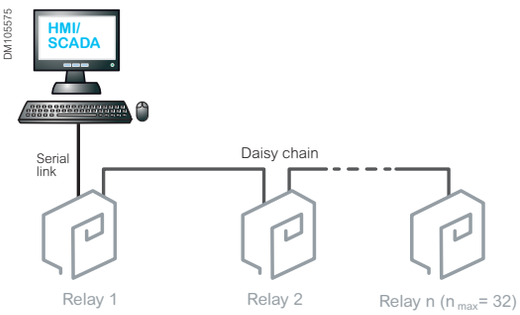

Connection to SCADA using serial line

This architecture allows you to connect HMI/SCADA to a set of Easergy protection relays using a multi-drop serial communication link with master-slave communication.

Available protocols:

- Modbus RTU
- IEC 60870-5-101
- IEC 60870-5-103
- DNP3
- DeviceNet
- Profibus
- SPAbus

Time synchronisation protocol:

- IRIG-B
- Minute pulse

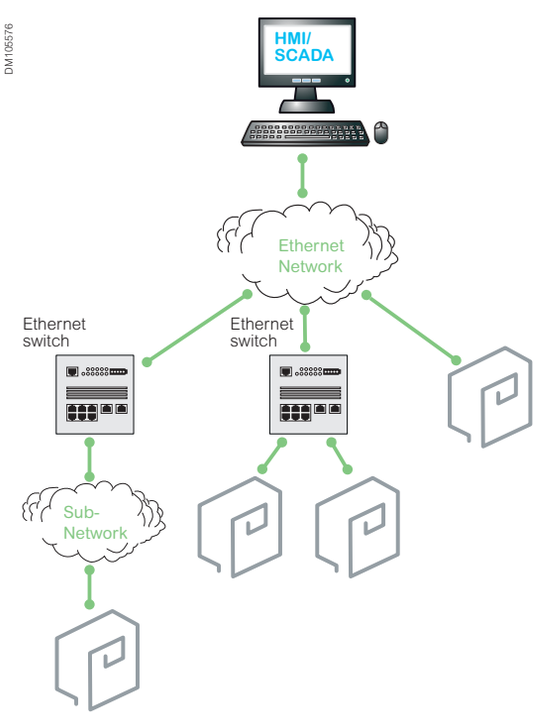

Connection to SCADA using Ethernet

This architecture allows you to connect a set of Easergy protection relays directly to an Ethernet network.

Available protocols:

- IEC 61850
- IEC 60870-5-101
- DNP3
- Modbus
- EtherNet/IP

Note: It is possible to mix on the same Ethernet network the IEC 61850 protocol with any of the 4 other protocols.

This allows you to use the GOOSE messages between relays together with another protocol for communication to SCADA.

It is also possible to connect an Easergy relay to 2 different control systems, using the same Ethernet communication port and IEC 61850 protocol for one of them and any available protocol for the other one.

The Easergy P3 relay handles the IEC 61850 station bus, in compliance with standards IEC 61850-6, 7-1, 7-2, 7-3, 7-4 and 8-1 Ed.1 or Ed.2, according to configuration.

Other available Ethernet protocols:

- FTP for file transfer
- SNTP for time synchronization
- HTTP for web server

Communication

Example of communication

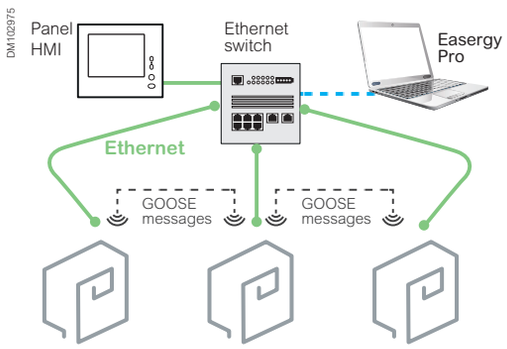

Architecture example 1

Switchboard internal network

This architecture allows fast GOOSE communication between Easergy protection relays of the switchboard, thus avoiding costly wiring. Typical uses are logic discrimination, load shedding, etc.

In addition, a panel HMI featuring a web browser can be used to monitor and control the entire switchboard.

A spare connection on the panel Ethernet switch can also be provided for connecting the Easergy Pro.

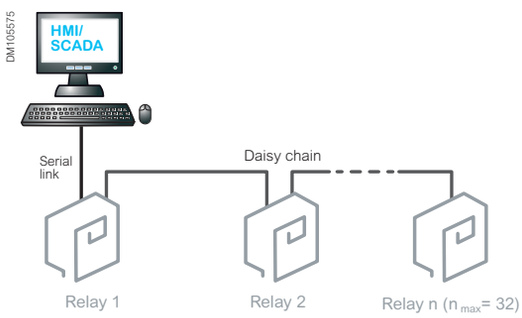

Architecture example 2

Connection to SCADA using serial lines and legacy protocols

This architecture allows you to connect HMI/SCADA to a set of Easergy protection relays using a multi-drop serial communication link with master-slave communication protocols such as Modbus-RTU, DNP3, or IEC 61870-5-103.

The RS485 serial communication port of the Easergy protection relay enables simple daisy chaining wiring thanks to its 2 RJ45 connectors, suited for 2-wire or 4-wire cabling. A termination module is plugged into the last connection. As an alternative, the fiber optic serial communication port can be used.

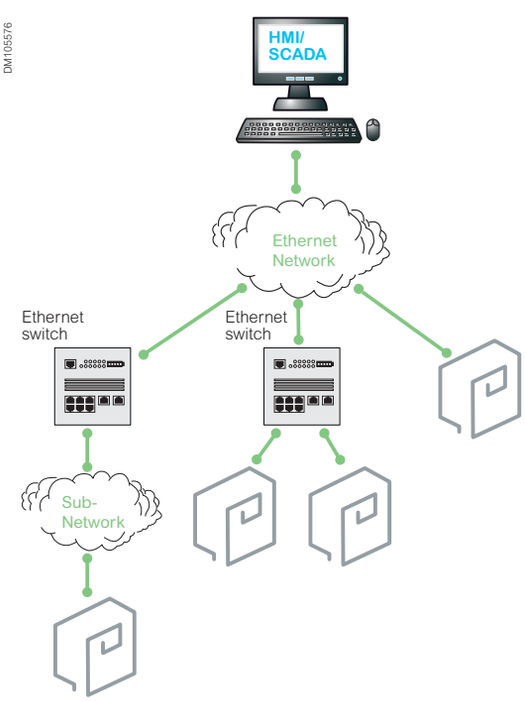

Architecture example 3

Connection to HMI/SCADA using Ethernet with redundant paths

When using an Ethernet infrastructure for the system network, redundant paths are often created. This is usually a deliberate action to improve communication availability, but can also result from non-mastered and overly complicated network architectures.

Redundant paths, however, can result in loops that are not compatible with normal Ethernet operation because they permit frames to propagate endlessly, inducing a phenomenon known as "frame storm." Using such network topologies therefore requires the use of special management techniques.

Communication

SCADA system

DM105577

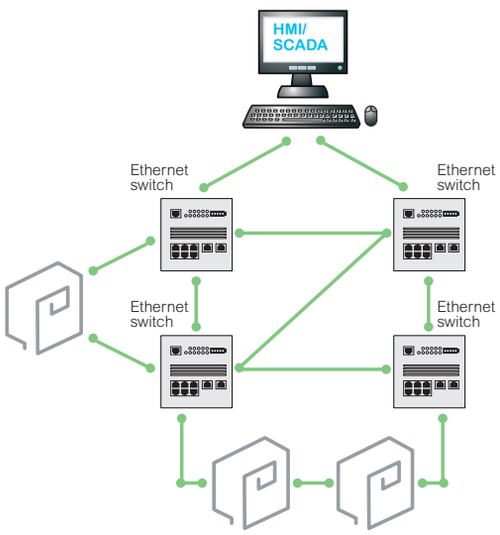

RSTP (Rapid Spanning Tree Protocol)

The principle of RSTP is to virtually cut all links that are not necessary at a given time, changing the meshed topology into a tree topology.

The main advantage of RSTP is that it is widespread and works on any network topology. On the other hand, RSTP takes milliseconds or seconds to reconfigure the network in case of network interruption.

DM105578

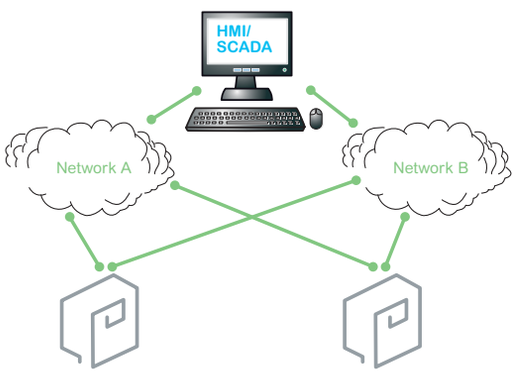

PRP (Parallel Redundancy Protocol)

The principle of PRP is to transmit frames in parallel on two independent network infrastructures: A and B.

The receiving device is in charge of eliminating the redundant frame if it is received.

PRP features a 0 ms recovery time in case of lost of failed frame.

PRP is supported by Easergy P3 relays.

Communication

Data exchanged between Easergy P3 and SCADA

Ethernet ports

Protocol	IEC 61850	Ethernet/IP	FTP
Real-time data			
Measurement	●	●	-
Alarms and status	●	●	-
Controls	●	●	-
Time-stamped events	●	●	-
Historical data			
Disturbance records	●	-	●
Setting management			
Setting group change	●	●	-

Serial Ports

Protocol	IEC 60870-5-103	DeviceNet	Profibus	SPAbus
Real time data				
Measurement	●	●	●	●
Alarms and status	●	●	●	●
Controls	●	●	●	●
Time-stamped events	●	●	●	●
Historical data				
Disturbance records	●	-	-	-
Sequence of event record files	●	-	-	-
Setting management				
Setting group change	●	●	●	●
Settings	-	-	-	●

Communication

Data exchanged between Easergy P3 and SCADA

Ethernet or Serial ports

Protocol	DNP3	IEC 60870-5-101	Modbus
Real-time data			
Measurement	•	•	•
Alarms and status	•	•	•
Controls	•	•	•
Time-stamped events	•	•	•
Setting management			
Setting group change	•	•	•

Communication

Engineering system and System configuration

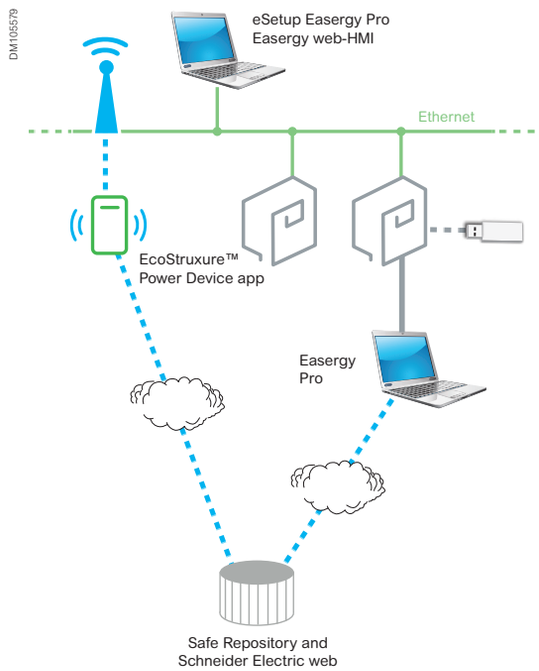

Engineering system

eSetup Easergy Pro

eSetup Easergy Pro can be connected to a single Easergy protection relay on the front USB port or to a group of Easergy protection relays via Ethernet.

eSetup Easergy Set allows you to prepare the configuration of the relay without having any physical relay. For this purpose, eSetup Easergy Pro provides the latest version of the configuration description file directly from the web.

EcoStruxure™ Power Device app

EcoStruxure™ Power Device app can be connected to the Easergy protection relays using a Wi-Fi router.

EcoStruxure™ Power Device app is also connected to the safe repository, allowing you to access todocuments and store files downloaded from the relay.

Easergy web-HMI

In addition to eSetup Easergy Pro, most of the resources of the relay can be accessed with a standard web browser, using the web pages embedded into the relay.

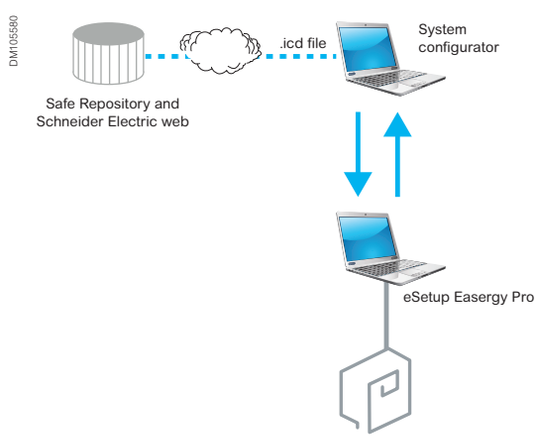

System configuration according to IEC 61850

The methodology described in IEC 61850-6 standard can be applied with Easergy protection relays to build a protection and control system based on this standard.

.icd file

When the configuration of an Easergy protection relay is done, setting tool can generate IED capability file. This file can be used by the system configurator.

Communication

Arc flash protection system by network communication

Arc flash protection system: Application example

In this application example, the arc flash sensor for zone 4.1 is connected to Device 1. If the arc flash sensor awakens and simultaneously Device 3 sends a current signal, the zone 4.1 is isolated by the outgoing feeder breaker.

The arc flash sensor for zone 4.2 is connected to Device 2 and operates the same way.

The arc flash sensors for zone 3 are connected to Device 1, 2, or 3. If a sensor awakens in zone 3, the light-only signal is transferred to Device 3, which then trips the main circuit breaker.

An eventual arc flash fault in zone 1 or 2 does not necessarily activate the current element in Device 2. However, arc detection can be achieved by using the light-only principle. If an arc flash occurs in cable termination, zone 1, or zone 2, the fault is cleared by the upstream circuit breaker.

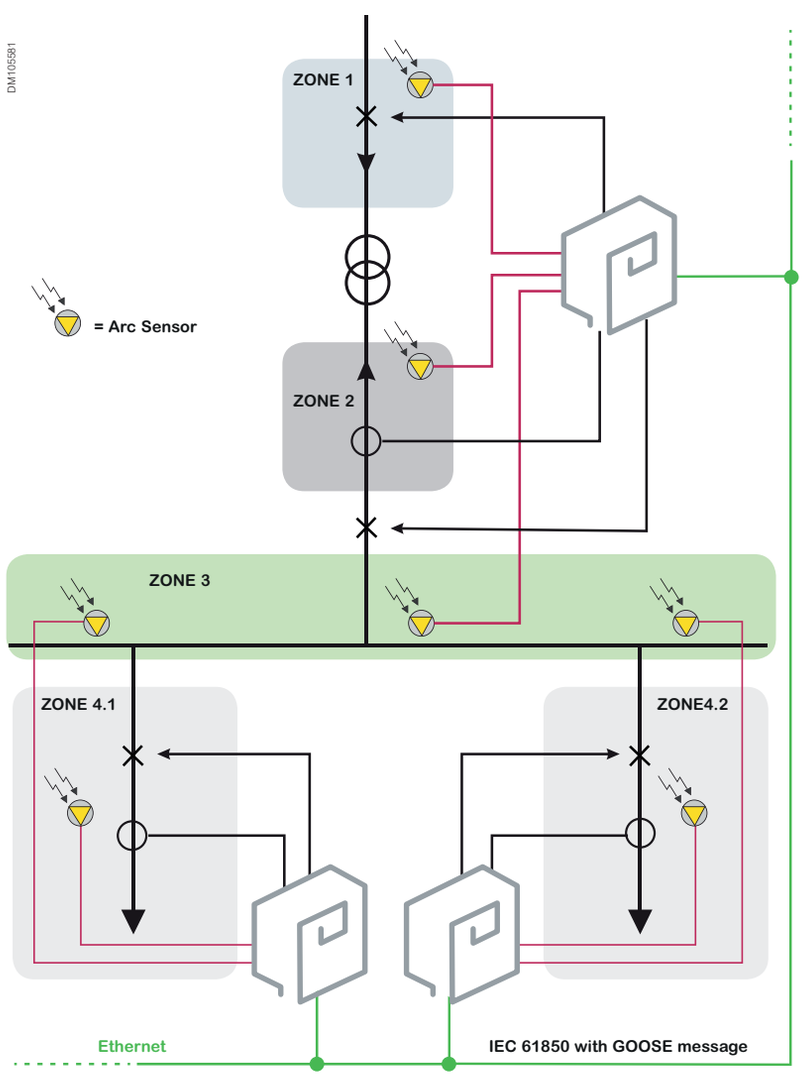

Easergy P3 Standard

Easergy P3 Standard

Presentation	30
Functional view	32
Base unit presentation	35
Local HMI	35
Rear panel connections	36
Base unit dimensions	37
Cut-out and mounting	37
Base unit characteristics	38
Technical characteristics	38
Environmental characteristics	39
Communication protocols	41
Programmable stages	42
Circuit breaker control	43
Connection diagram	44
Model selection	47

Presentation

The Easergy P3 Standard protection relay has been developed to meet your standard protection needs for building, distribution utilities, and industrial applications. Thanks to its optimized and flexible design, the Easergy P3 Standard provides an excellent solution for various protection applications.

The user-friendly Easergy P3 Standard brings greater efficiency to your operations by enabling rapid ordering, configuration, and operations for an unparalleled digital experience

Easergy P3 Standard at a glance

Universal

- All-in-one box with feeder, transformer, and motor protections
- All communication protocols embedded on serial and Ethernet links including IEC 61850 ed.1 and ed. 2

Robust

- Best-in class reliability based on 100+ years of experience in Sepam, MiCOM and Vamp relays
- Strong tests performed in international laboratories
- Compliant to IEC electro-mechanical standards
- Designed for demanding industrial conditions with conformal-coated printed circuit boards

Efficient and connected

- Easy to order with 10 standard configurations delivered off the shelf in less than 7 days (location dependent)
- Easy to configure with the unique eSetup Easergy Pro setting software
- Easy to test with the virtual simulation test for direct injection of current and voltage from eSetup Easergy Pro
- Easy to install with withdrawable rear connectors with CT shortening
- Easy to use and maintain with the embedded web-HMI and EcoStruxure™ Power Device app for direct access on site via your laptop, smartphone, or tablet.

PM106572

Easergy P3 Standard with panel seal cover REL52833

Presentation

Easergy P3 is designed to cover all the standard applications with only one device: the Universal Protection.

DM105529

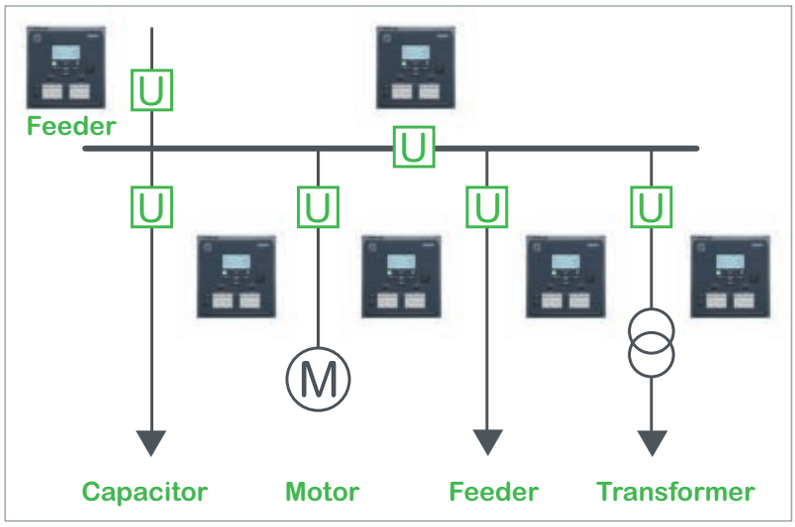

Easergy P3 Standard is available **in 3 models**:

Model	Communication	Main advantages
Easergy P3U10 • 4 CT / 1VT • 2 DI / 5 DO	Stand-alone device, without communication ports	**Simplicity**, while allowing the latest features, like single-line diagrams (mimics), programmable protection stages, logics and function keys
Easergy P3U20 • 4 CT / 1VT • 10 DI / 5 DO	Open communication protocols on serial or Ethernet links, with IEC 61850	**Openness to IEC 61850**, while keeping the core functionnalities of Easergy P3 Standard relay
Easergy P3U30 • 4 CT / 4VT • 16 DI / 8 DO	Open communication protocols on serial or Ethernet links, with IEC 61850	**Wide scope of possibilities,** with the directional protection, synchro-check, fault location, and increased number of input and outputs

A common set of functions extends the possibilities of protection and control:

- Single-line diagrams (mimic) in the display
- Programmable protection stages
- Programmable logics
- 2 programmable function keys
- Synchro-check function
- Direct-access USB port
- Up to 6 objects controlled

Functional view

Easergy P3U10

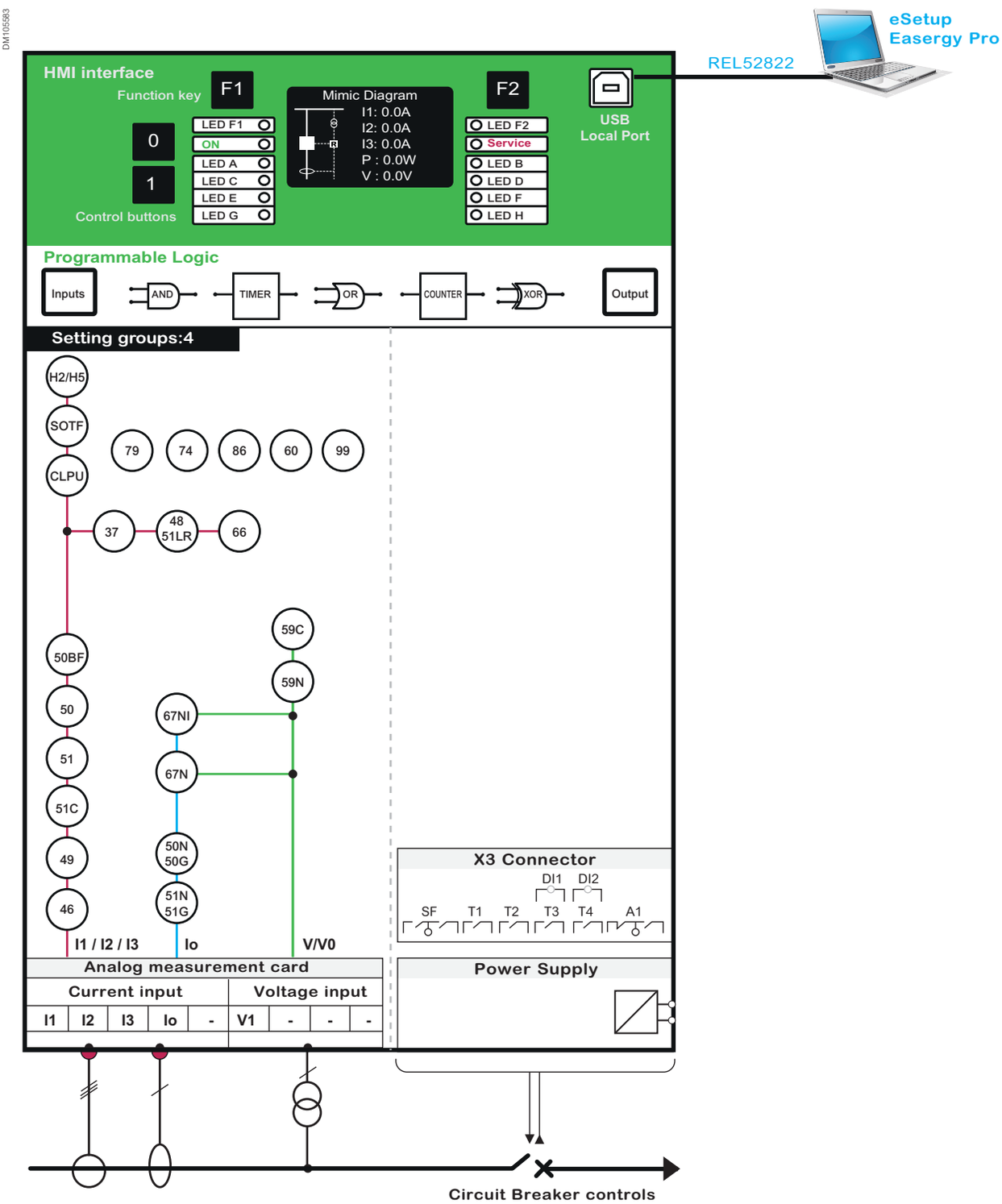

Functional view

Easergy P3U20

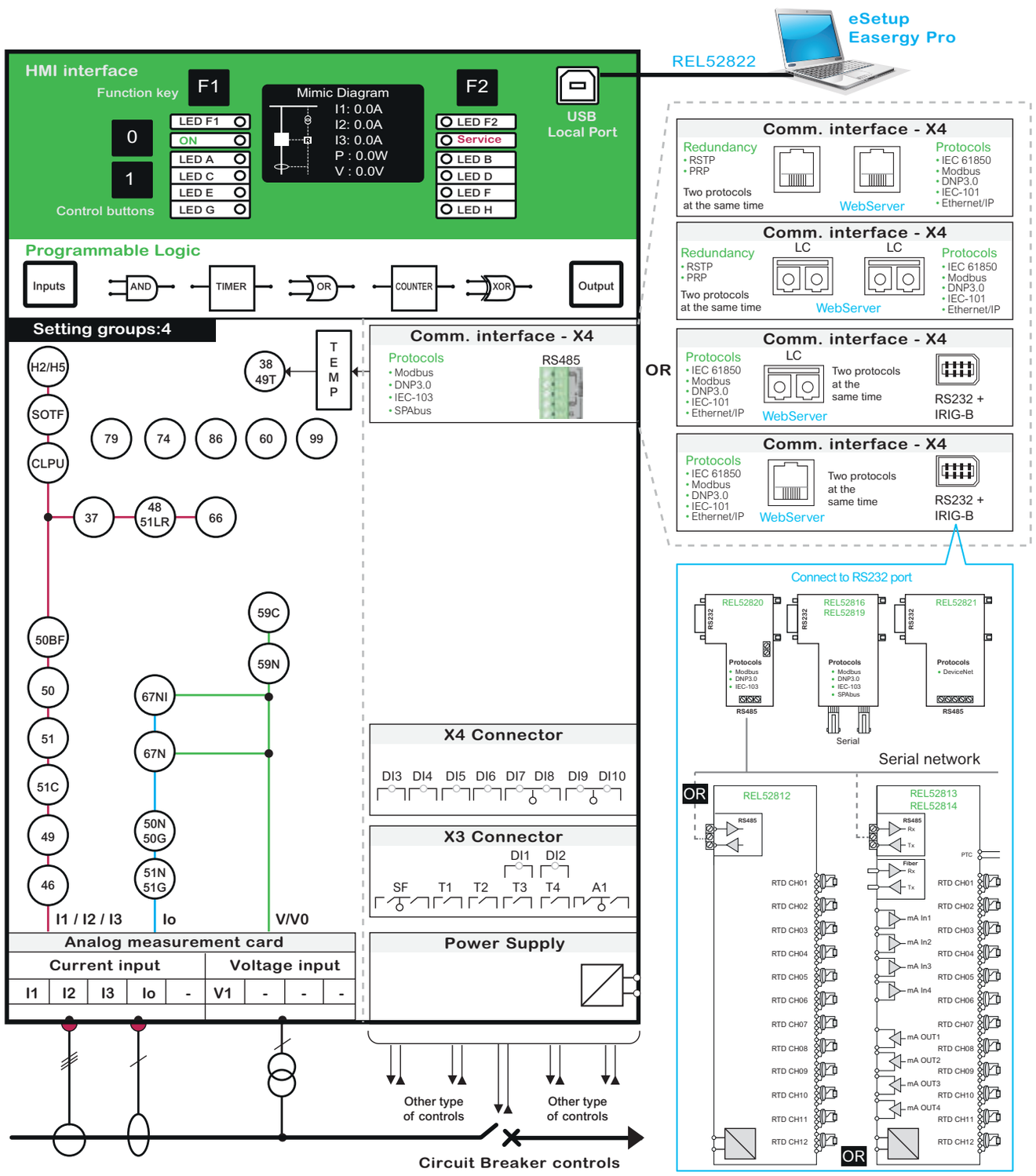

Functional view

Easergy P3U30

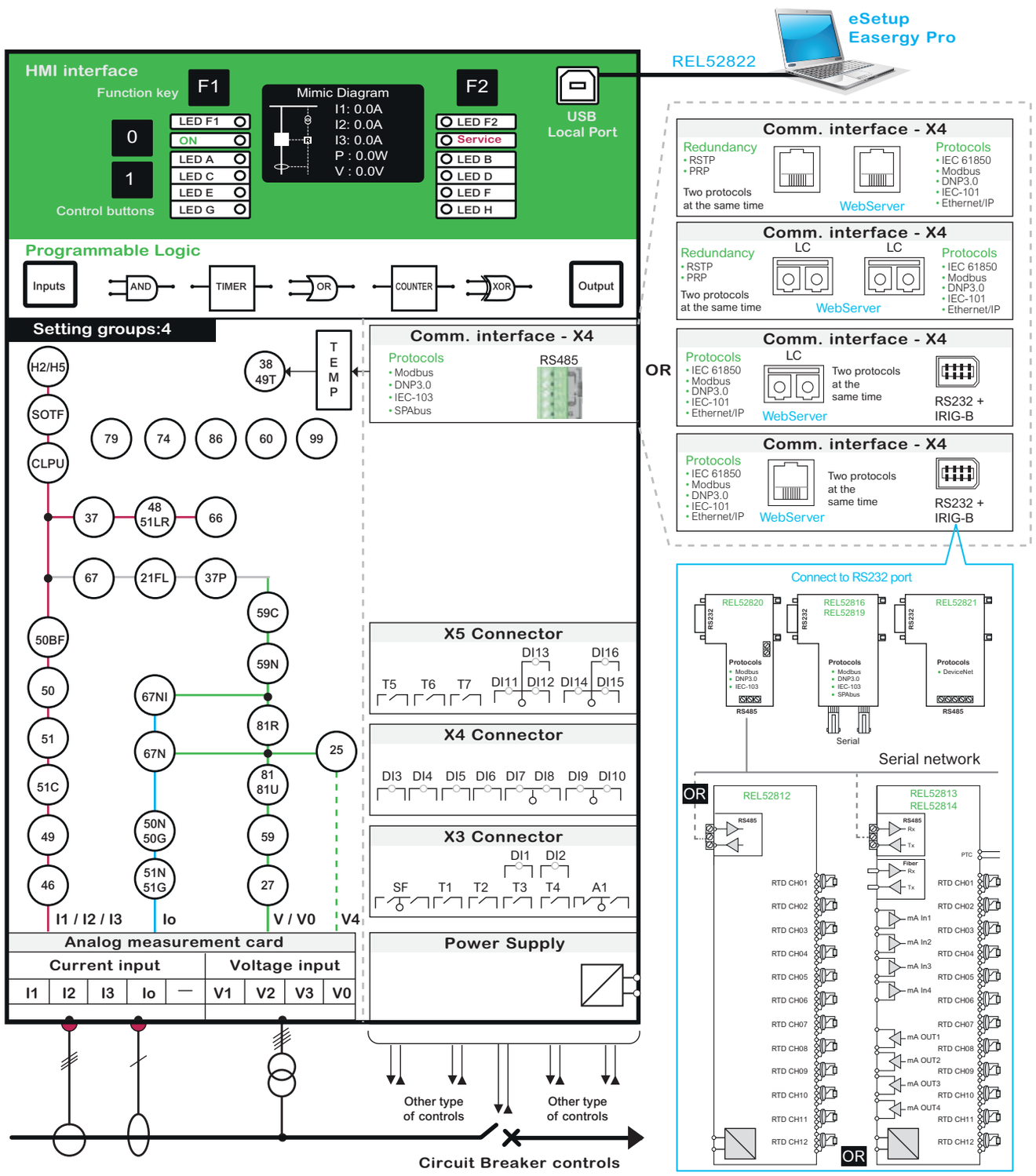

Base unit presentation

Local HMI

DM105586

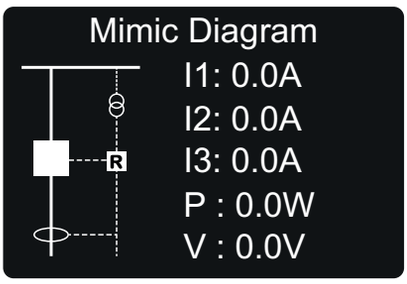

Single-line diagram of the power system

Comprehensive data for fast and easier operation

All the data required for a local equipment operation may be displayed on demand:

- Display the single-line diagram and freely assignable analog values
- Display of all measurements
- Display of operation and alarm messages
- Display and setting of all parameters
- Entry of password to protect parameter and protection settings

Ergonomic data presentation

- Keypad keys identified by pictograms for intuitive navigation
- Graphical 128x64 LCD screen to display any character or symbol
- Excellent display quality under all lighting conditions
- Control buttons (0/1) to operate the circuit breaker and/or other controlled object
- 8 freely programmable LEDs to identify easily the message showed
- Labels are printed on a transparent film allowing customization of the relay
- Programmable function key (F1 / F2)

Front panel: Control and push-buttons	
i	INFO push-button for viewing additional information, entering the password view, and adjusting the LCD contrast
F1	Programmable function push-button
F2	Programmable function push-button
OK	ENTER push-button for activating or confirming a function
∧	UP navigation push-button for moving up in the menu or increasing a numerical value
∨	DOWN navigation push-button for moving down in the menu or decreasing a numerical value
<	LEFT navigation push-button for moving backwards in a parallel menu or selecting a digit in a numerical value
>	RIGHT navigation push-button for moving forwards in a parallel menu or selecting a digit in a numerical value
O	Circuit breaker OFF push-button
I	Circuit breaker ON push-button
⌂	HOME/CANCEL push-button for returning to the previous menu. To return to the first menu item in the main menu, press the button for at least three seconds

PM106367

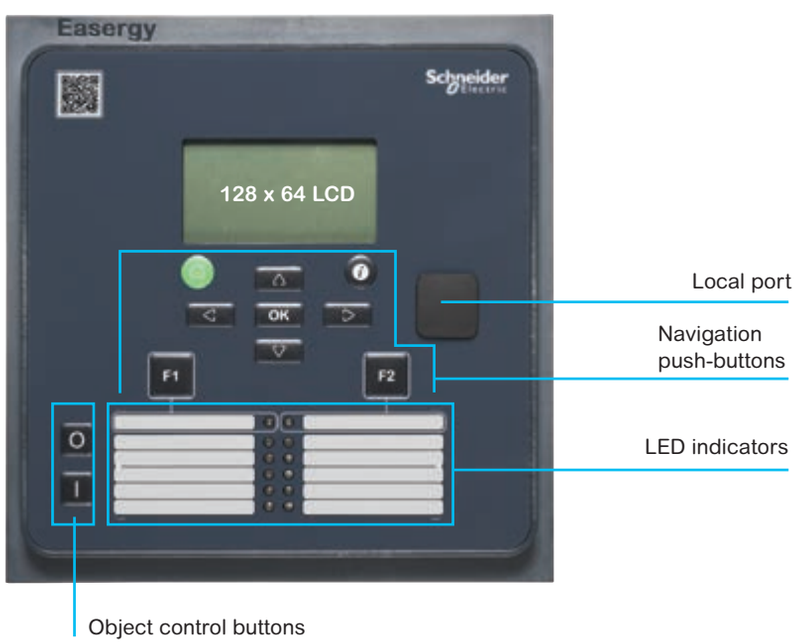

Working language

All the texts and messages displayed on the Easergy P3U are available in two languages at the same time. Consult us for availability.

Base unit presentation

Rear panel connections

Rear panels views

Easergy P3U10

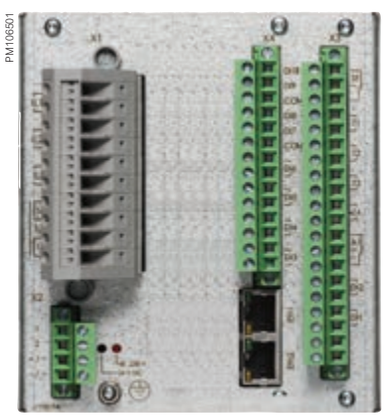

Easergy P3U20

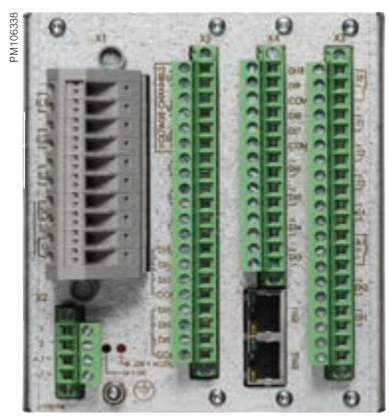

Easergy P3U30

Withdrawable connectors

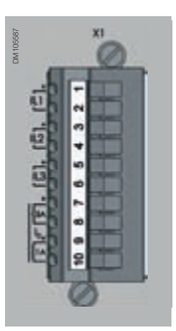

Optional terminal X1:
Pluggable screw
clamp connector

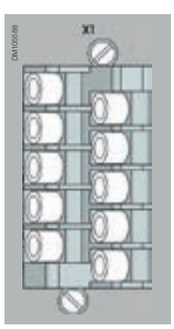

Optional terminal X1:
Pluggable ring-lug connector

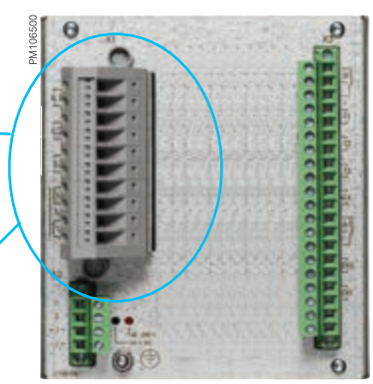

Base unit dimensions

Weight (maximum)
Easergy P3U10 / P3U20 / P3U30 2.5 Kg (5.519 lb)

Degree of protection (IEC 60529)
IP54 Front panel / IP20 Rear side

Cut-out and mounting

Cut-out accuracy must be complied with to ensure good withstand.

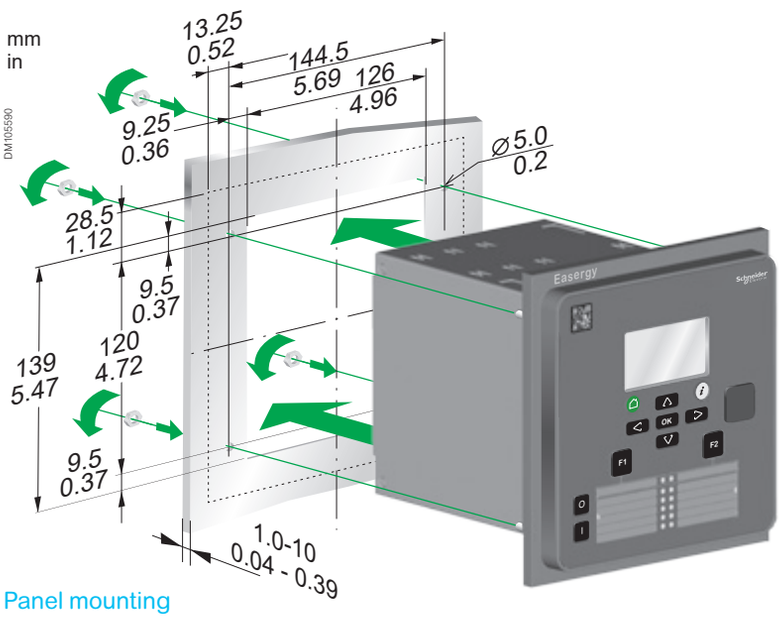

Panel mounting

	A	B
With screw connector	214 mm / 8.43"	192 mm / 7.6"
With ring-lug connector	226 mm / 8.90"	204 mm / 8.0"

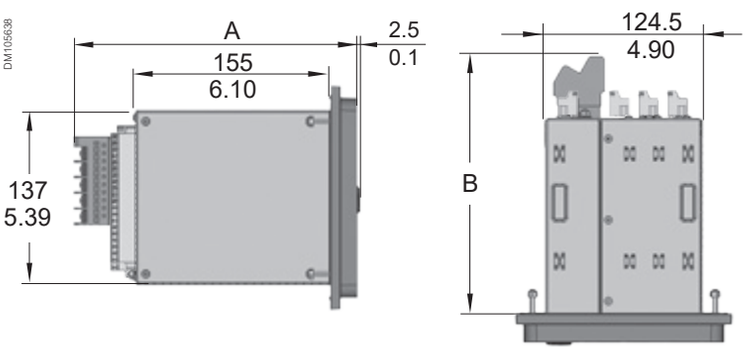

Projection mounting with the raising frame REL52834

	A	B
With screw connector	214 mm / 8.43"	147 mm / 5.8"
With ring-lug connector	226 mm / 8.90"	159 mm / 6.2"

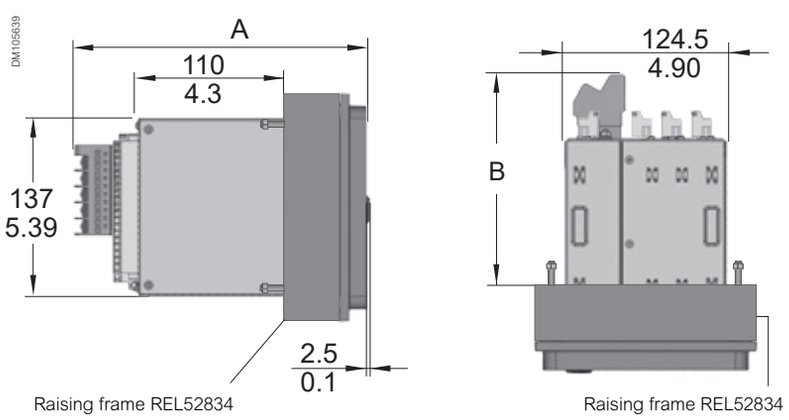

Raising frame REL52834

Raising frame REL52834

Base unit characteristics

Technical characteristics

Analog inputs	Measuring range	Input Impedance	Consumption	Rated thermal withstand	1-second overload	10-second overload
Phase Current Input 5A CT Configurable for CT secondaries 1 to 10A	0.05 – 250 A	0.003 Ohm	0.075 VA	20 A (Continuously)	500 A	100 A
Residual Current Input (I0) 5A CT Configurable for CT secondaries 0.1 to 10A	0.015 – 50 A	0.003 Ohm	0.075 VA	20 A (Continuously)	500 A	100 A
Residual Current Input (I0) 1A CT Configurable for CT secondaries 0.1 to 10.0A	0.003 – 10 A	0.02 Ohm	0.02 VA	4 A (Continuously)	100 A	20 A
Residual Current Input (I0) 0.2A CSH sensor Configurable for CT secondaries 0.1 to 10.0A	0.0006 – 2 A	0.02 Ohm	0.02 VA	0.8 A (Continuously)	20 A	4 A
Voltage Input Configurable for VT secondaries 50 to 120V	0.5 – 190 V (100 V / 110 V)	n.a.	< 0.5 VA	250V (Continuously)	n.a.	600 V

Analog temperature input and Analog output					
Type of temperature sensor		Pt100	Ni100	Ni120	Cu10
Maximum distance between sensor and module		up to 2,000 m (1)	up to 2,000 m (1)	up to 2,000 m (1)	up to 2,000 m (1)
Analog Output	Minimum current	0 mA			
	Maximum current	20 mA			
Operating temperature:		0°C (32°F) to +55°C (131°F)			
Power supply	REL52811 / REL52812	24 to 230 Vac/dc, 50/60 Hz			
	REL52813	24 Vdc			
	REL52814	48 to 230 ac/dc, 50/60 Hz			

Digital Input				
Nominal operation voltage	DI1 to DI16	24 to 230 V ac/dc	110 to 230 V ac/dc	220 to 230 V ac/dc
Typical switching threshold		12 V dc	75 V dc	155 V dc
Input limit voltage	At state 1	≥ 19.2 V dc	≥ 88 V dc	≥ 176 V dc
	At state 0	< 10.0 V dc	< 60 V dc	< 140 V dc
Frequency		45 to 65 Hz	45 to 65 Hz	45 to 65 Hz
Typical consumption		<4 mA (typical approx. 3 mA)		
Voltage withstand		255 V ac/dc		

Digital Output				
Type of contact		Control and Trip contact, Tx	Signal contact, A1	Signal Contact, SF
Rated Voltage		250 V ac/dc	250 V ac/dc	250 V ac/dc
Continuous current		5 A	5 A	5 A
Breaking capacity	AC	2.000 VA	2.000 VA	2.000 VA
	DC (L/R=40ms) at 48 V dc	1.15 A	1 A	1 A
	DC (L/R=40ms) at 110 V dc	0.5 A	0.3 A	0.3 A
	DC (L/R=40ms) at 220 V dc	0.25 A	0.15 A	0.15 A
Making capacity	≤ 0.5 s	30 A	30 A	-
	≤ 3.0 s	15 A	15 A	-
Minimum making capacity		100 mA @ 24 Vac/dc	100 mA @ 24 Vac/dc	100 mA @ 24 Vac/dc
Typical operation time		<8 ms	-	-
Contact material		AgNi 90/10	AgNi 0.15 gold plated	AgNi 0.15

Power supply			
Nominal Voltage		48 to 230 Vac/dc	24 to 48 Vdc (2)
Range		-20% / +10% (38.4 to 253 Vac/dc)	±20% (19.2 to 57.6 Vdc) (2)
Inrush current (DC)		25 A with time constant of 1000 µs	
		25 A with time constant of 750 µs	
		15 A with time constant of 500 µs	
Power consumption	Normal conditions	<15 W (<30 VA)	
	Output relays activated	<25 W (<50 VA)	
Acceptable momentary outages		<50 ms (110 V dc)	

(1) 78,750 in
(2) Check the available power supply range from the device's serial number label

Base unit characteristics

Environmental characteristics

Electromagnetic compatibility

	Standard and test class/level	Test value
Emission tests	**IEC/EN 60255-26 (ed3)**	
Conducted	EN 55022, Class A / CISPR 22	0.15 – 30 MHz
Emitted	EN 55011, Class A / CISPR 11	30 – 1000 MHz
Immunity	**IEC/EN 60255-26 (ed3)**	
Slow damped oscillatory wave 1MHz	IEC/EN 61000-4-18	±2.5kVp CM ±2.5kVp DM
Fast damped oscillatory wave 3MHz, 10 MHz and 30 MHz	IEC/EN 61000-4-18	±2.5kVp CM
Static discharge (ESD)	IEC/EN 61000-4-2 Level 4	±8 kV contact ±15 kV air
Emitted HF field	IEC/EN 61000-4-3 Level 3	80 - 2700 MHz, 10 V/m
Fast transients (EFT)	IEC/EN 61000-4-4 Level 4	±4 kV, 5/50 ns, 5 kHz
Surge	IEC/EN 61000-4-5 Level 3	±2 kV, 1.2/50 µs, CM ±1 kV, 1.2/50 µs, DM
Conducted HF field	IEC/EN 61000-4-6 Level 3	0.15 - 80 MHz, 10 Vrms
Power-frequency magnetic field	IEC/EN 61000-4-8	300 A/m (continuous) 1000 A/m 1 – 3s
Pulse magnetic field	IEC/EN 61000-4-9 Level 5	1000A/m, 1.2/50 µs
ac and dc voltage dips	IEC/EN 61000-4-29, IEC/EN 61000-4-11	0% of rated voltage • ac: ≥ 0.5 cycle • dc: ≥ 10 ms 40% of rated voltage • ac: 10 cycles • dc: 200 ms 70% of rated voltage • ac: 25 cycles • dc: 500 ms
ac and dc voltage interruptions	IEC/EN 61000-4-29, IEC/EN 61000-4-11	100% interruption • ac: 250 cycles • dc: 5 s
Voltage alternative component	IEC/EN 61000-4-17	15% of operating voltage (dc) / 10 min

Mechanical robustness

	Standard and test class/level	Test value
In operation		
Vibrations	IEC 60255-21-1, Class II / IEC 60068-2-6, Fc	1 Gn, 10 Hz – 150 Hz
Shocks	IEC 60255-21-2, Class II / IEC 60068-2-27, Ea	10 Gn / 11 ms
Seismic	IEC 60255-21-3 Method A, Class II	2G horizontal / 1G vertical , 1–35 Hz
De-energized		
Vibrations	IEC 60255-21-1, Class II / IEC 60068-2-6, Fc	2 Gn, 10 Hz – 150 Hz
Shocks	IEC 60255-21-2, Class II / IEC 60068-2-27, Ea	30 Gn / 11 ms
Bump	IEC 60255-21-2, Class II / IEC 60068-2-27, Ea	20 Gn / 16 ms

Base unit characteristics

Environmental characteristics

Environment tests

	Standard and test class/level	Test value
In operation		
Dry heat	EN / IEC 60068-2-2, Bd	70°C (158°F)
Cold	EN / IEC 60068-2-1, Ad	-40°C (-40°F)
Damp heat, cyclic	EN / IEC 60068-2-30, Db	From 25°C (77°F) to 55°C (131°F) From 93% RH to 98% RH Testing duration: 6 days
Damp heat, static	EN / IEC 60068-2-78, Cab	40°C (104°F) 93% RH Testing duration: 10 days
Change of temperature	IEC / EN 60068-2-14, Nb	Lower temp -40°C (-40°F) Upper temp 70°C (158°F) 5 cycles
Flowing mixed gas corrosion test, method 1	IEC 60068-2-60, Ke	25°C (77°F), 75% RH, 21 days 100 ppb H2S, 500 ppb SO_2
Flowing mixed gas corrosion test, method 4	IEC 60068-2-60, Ke	25°C (77°F), 75% RH, 21 days 10 ppb H2S, 200 ppb NO_2, 10 ppb CL_2, 200 ppb SO_2
In storage		
Dry heat	EN / IEC 60068-2-2, Bb	70°C (158°F)
Cold	EN / IEC 60068-2-1, Ab	-40°C (-40°F)

Environmental conditions

Ambient temperature, in-service	-40 – 60°C (-40 – 140°F)	
Ambient temperature, storage	-40 – 70°C (-40 – 158°F)	
Relative air humidity	< 95%, no condensation allowed	
Maximum operating altitude	2000 m (6561.68 ft)	

Safety

	Standard and test class/level	Test value
Electrical safety tests		
Impulse voltage withstand	IEC/EN 60255-27	5 kV, 1.2/50 µs, 0.5 J 1 kV, 1.2/50 µs, 0.5 J Communication
Dielectric test	IEC/EN 60255-27	2 kV, 50 Hz 0.5 kV, 50 Hz Communication
Insulation resistance	IEC/EN 60255-27	
Protective bonding resistance	IEC/EN 60255-27	
Clearance and creepage distance	Design criteria for distances as per IEC 60255-27 Annex C (pollution degree 2, overvoltage category 3)	
Power supply burden	IEC 60255-1	

Communication protocols

Easergy P3 Standard can be connected to networks, thus providing access to the following type of data:

- Events
- Status information
- Measurements
- Control commands
- Clock synchronizing
- Settings (SPA-bus and embedded SPA-bus only)

PM106362

EcoStruxure™ Power Device app.

Main protocols

Easergy P3 Standard can be connected directly to serial and/or Ethernet protocols with two different protocols at the same time, selected by eSetup Easergy Pro software.

Communication protocols:

Serial protocols - RS232 / RS485 / serial Fiber Optic (*) port
Modbus RTU
DNP3.0
IEC 60870-5-101
IEC 60870-5-103
DeviceNet (*)
ProfibusDP (*)
SPA-Bus (*)
Ethernet protocols - RJ45 / LC port
IEC61850 ed1 & ed2
Modbus TCP
DNP3.0
IEC60870-5-101
Ethernet IP

Communication ports:

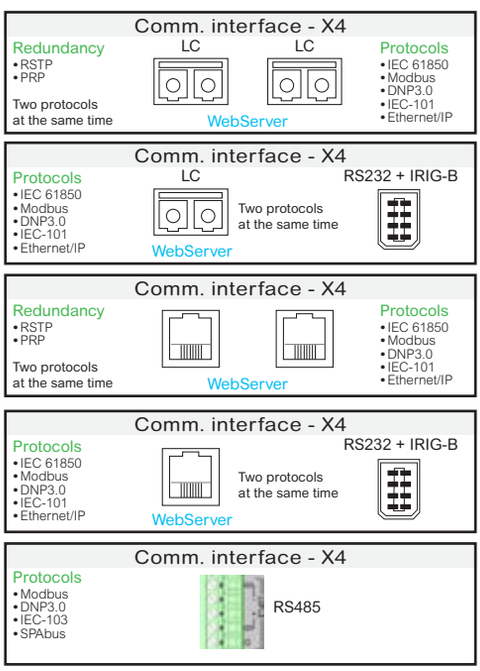

**Need external accessories to connect.*

PM106576

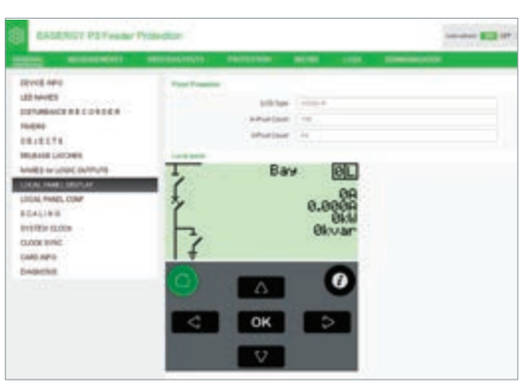

Easergy web-HMI

Redundancy protocols (RSTP or PRP)

When the devices are connecting in Ethernet link and demand for higher availability, Easergy P3 Standard can use Rapid Spanning Tree Protocol (RSTP) or Parallel Redundancy Protocol (PRP) to recover from a network failure.

Easergy P3 web-HMI

A webserver is available in Easergy P3 Standard to get information from the device to monitor all data, send commands, and change protection settings.

Programmable stages

Programmable protection function

Personalize your protection function

Easergy P3 Standard allows you to create or personalize the protection function when you need to achieve specific levels of protection.

There are now eight stages available to use with various applications. Each stage can monitor any analog (measured or calculated) signal and issue start and trip signals. Programmable stages extend the protection functionality of the manager series to a new level. The Programmable stage has the possibility of comparing two freely selectable signals between each other. Using this feature you can create a comparison function using the relay's own measured or calculated signals. One or both of the signals can be connected to the comparison function over GOOSE.

For example, if four stages of frequency are not enough, it is possible to reach a maximum of 12 using programmable stages. Other examples include using the stages to issue an alarm when there are too many harmonics (THD) or indicating reverse power condition by GOOSE.

.

EM100170

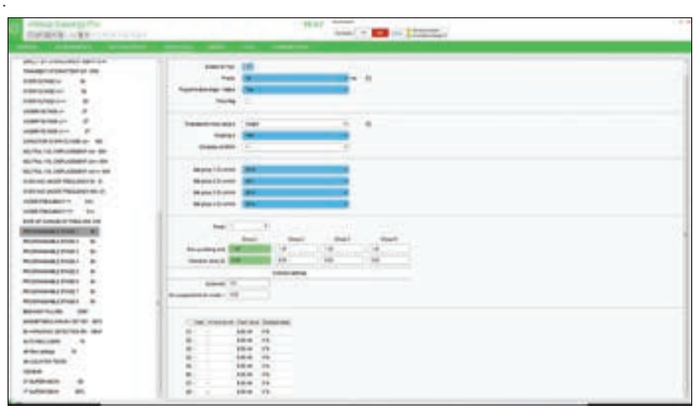

Circuit breaker control

With Easergy P3 Standard, you get intuitive functionality to protect your electrical network system.

Main CB functions are:

- Trip circuit supervision (ANSI 74)
- CT/VT supervision (ANSI 60/60FL)
- Latching (ANSI 86)
- CB close/open order
- Number of operations
- Cumulative breaking current
- Personalized functions

Maximize circuit breaker control

Easergy P3 Standard is a simple protection relay with a single-line diagram with control buttons (open and close), two personalized function keys, and eight configurable single-color LEDs in P3 Standard and fourteen tricolor LEDs in P3 advanced.

You can manage the control without external or additional component.

Example of implementation

The schematic is structured for typical use in MV switchgears, 100% adapted for your use case. You are free to change the internal logic to adapt the Easergy P3 Standard to follow your needs.

If a problem occurs, clear and concise information allows users to make the right decisions at the right time.

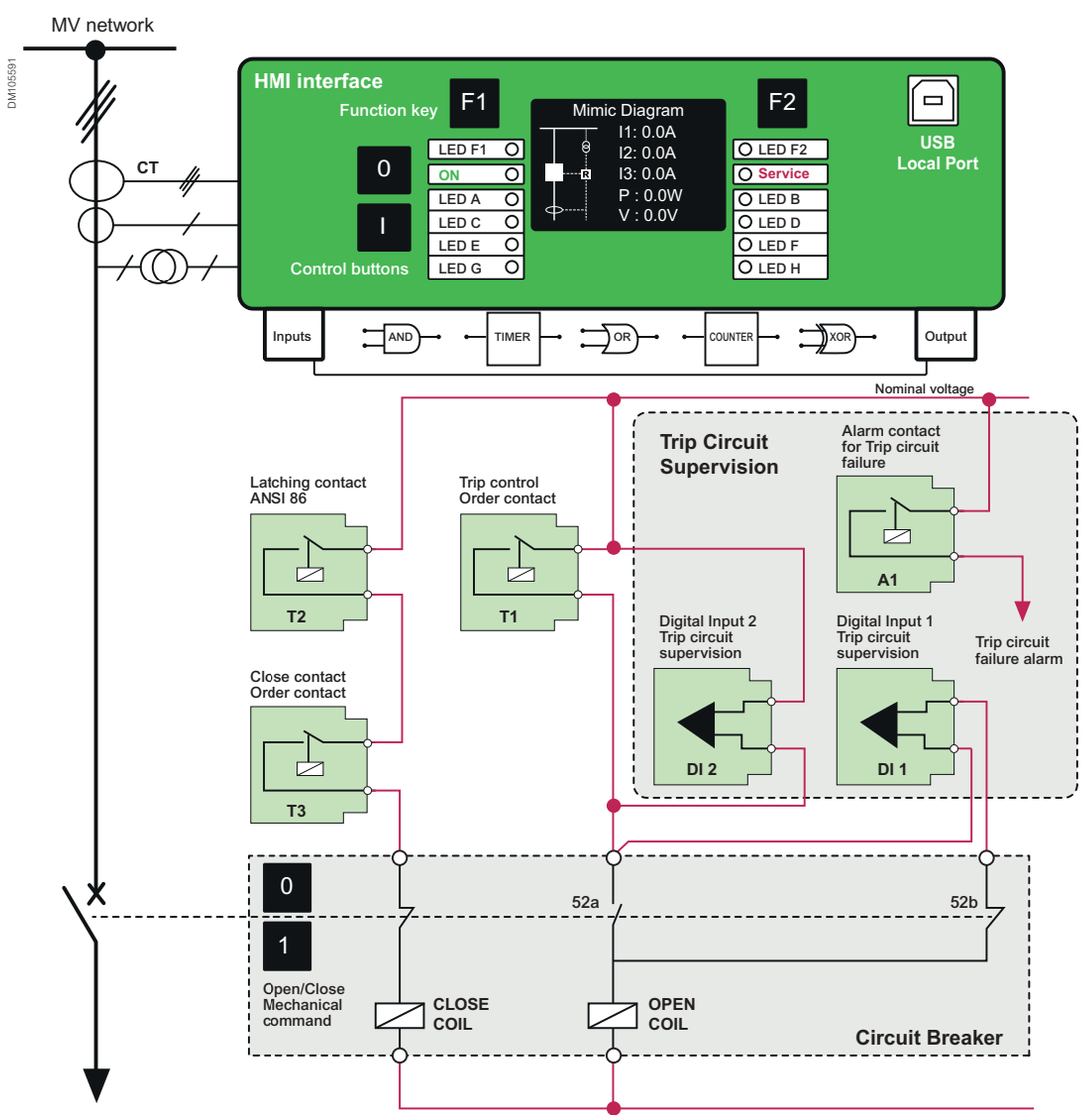

This electrical schematic can facilitate the IEC 61850 implementation because all the logics are determined by the protection unit that will make the decisions and if necessary can send GOOSE messages to other units.

Connection diagrams

Easergy P3U30 example

⚠ DANGER

HAZARD OF ELECTRIC SHOCK, ELECTRIC ARC OR BURNS

- only qualified personnel should install this equipment. Such work should be performed only after reading this entire set of instructions.
- NEVER work alone.
- turn off all power supplying this equipment before working on or inside it. Consider all sources of power, including the possibility of backfeeding.
- always use a properly rated voltage sensing device to confirm that all power is off.
- start by connecting the device to the protective earth and to the functional earth.
- screw tight all terminals, even those not in use.

Failure to follow these instructions will result in death or serious injury.

Application with 3 phase CTs, 1 earth CT, 1 VT and CB control

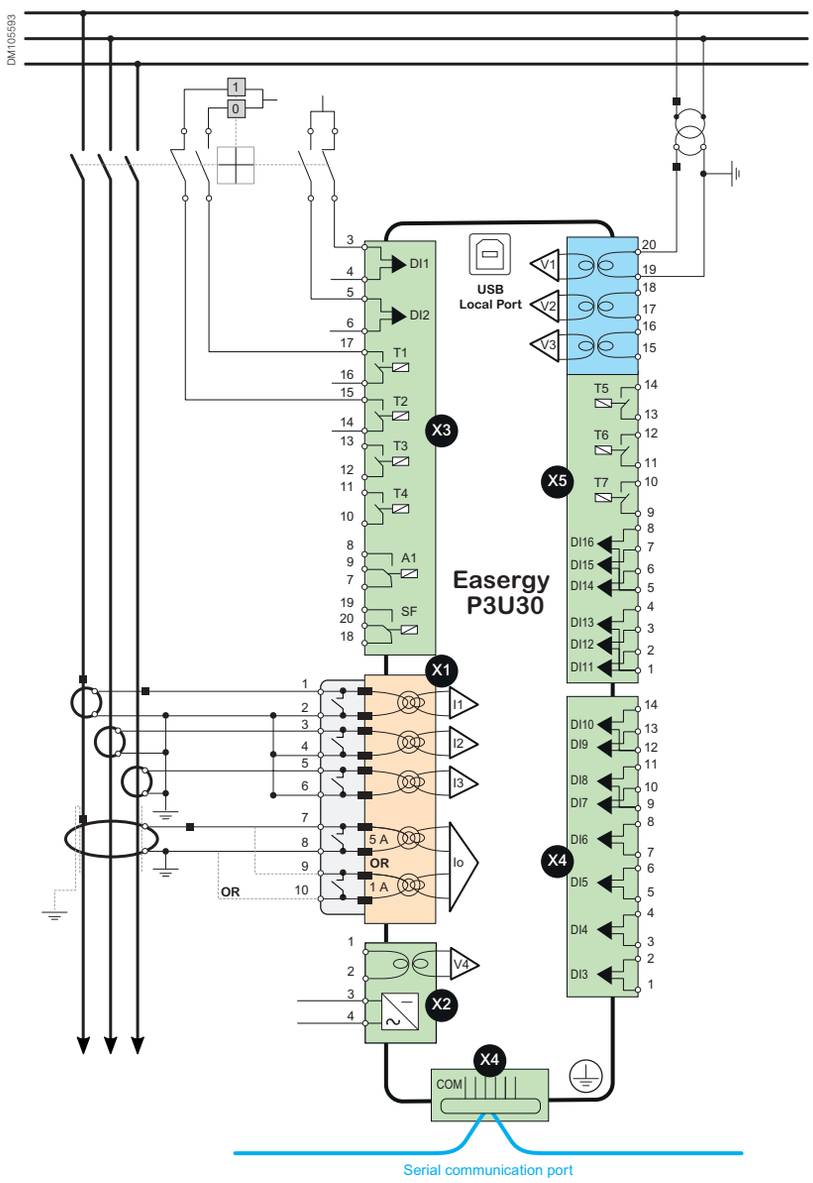

Note: Dangerous environment, make sure to read the all information, including warning instructions (left).

Connection diagrams

Easergy P3U30 example

⚠ DANGER

HAZARD OF ELECTRIC SHOCK, ELECTRIC ARC OR BURNS

- only qualified personnel should install this equipment. Such work should be performed only after reading this entire set of instructions.
- NEVER work alone.
- turn off all power supplying this equipment before working on or inside it. Consider all sources of power, including the possibility of backfeeding.
- always use a properly rated voltage sensing device to confirm that all power is off.
- start by connecting the device to the protective earth and to the functional earth.
- screw tight all terminals, even those not in use.

Failure to follow these instructions will result in death or serious injury.

Application with 3 phase CTs, 1 earth CT, 3 VTs, synchro-check and CB control

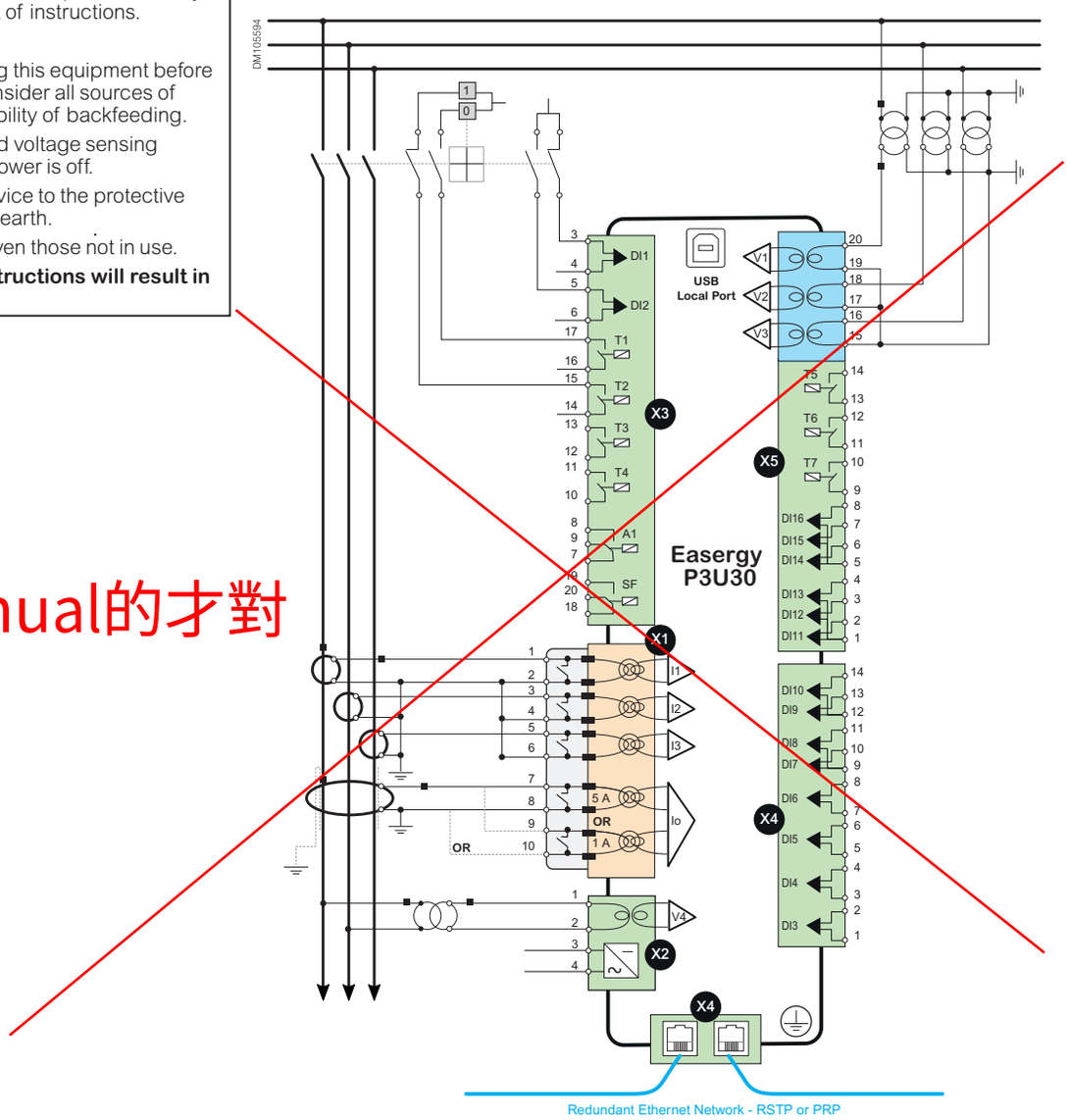

manual的才對

Note: Dangerous environment, make sure to read the all information, including warning instructions (left).

Connection diagrams

Easergy P3U30 example

⚠ DANGER

HAZARD OF ELECTRIC SHOCK, ELECTRIC ARC OR BURNS

- only qualified personnel should install this equipment. Such work should be performed only after reading this entire set of instructions.
- NEVER work alone.
- turn off all power supplying this equipment before working on or inside it. Consider all sources of power, including the possibility of backfeeding.
- always use a properly rated voltage sensing device to confirm that all power is off.
- start by connecting the device to the protective earth and to the functional earth.
- screw tight all terminals, even those not in use.

Failure to follow these instructions will result in death or serious injury.

Application with 3 phase CTs, 1 earth CT, 4 VTs and CB control

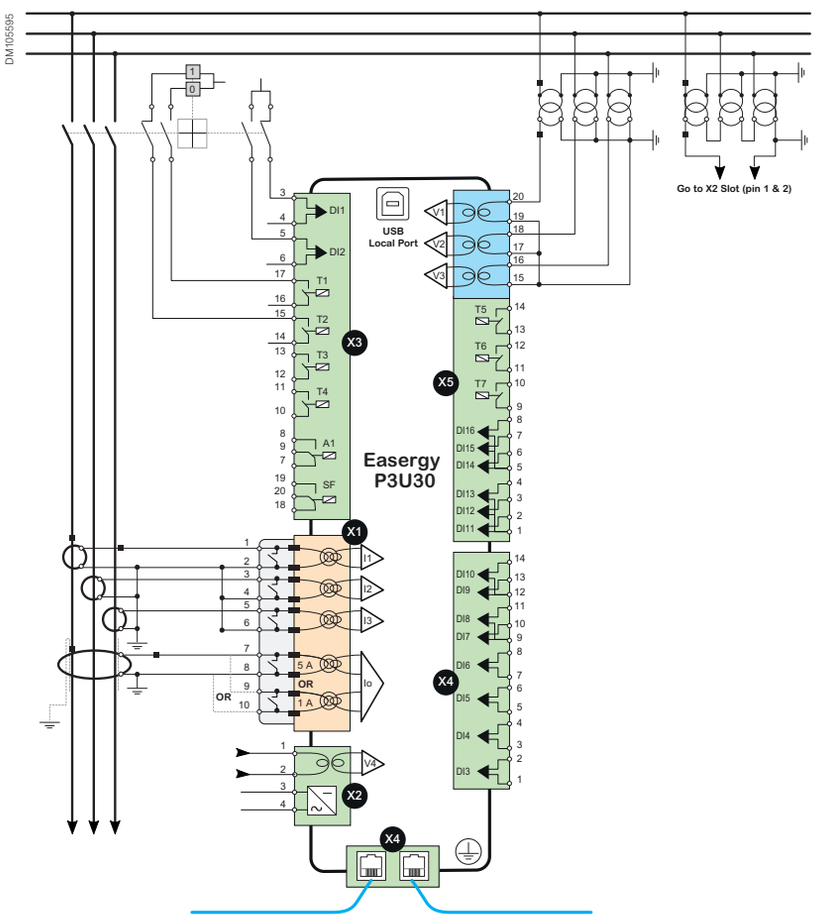

Note: Dangerous environment, make sure to read the all information, including warning instructions (left).

Model selection

Selecting product

Please, consult the “Ordering” section to choose specific characteristics in the relays for your system:

PM106367

P3U10
Standard application

Page 106

PM106367

P3U20
Standard application

Page 107

PM106367

P3U30
Standard application

Page 108

Or use our web configuration tool:

Go to web configurator

Easergy P3 Advanced

Easergy P3 Advanced

Presentation	50
Functional view	52
Base unit presentation	59
Integrated arc flash protection	59
Local HMI	60
Rear panel	61
Remote HMI	63
Base unit dimensions	64
Dimensions	64
Cut-out and mounting	65
Base unit characteristics	66
Technical characteristics	66
Environmental characteristics	67
Communication	69
Communication protocols	69
Programmable stages	70
Circuit breaker control	71
Power quality measurements	72
Connection diagrams	73
Model selection	76

Presentation

The Easergy P3 advanced is a protection relay developed to satisfy the protection needs for buildings, distribution utilities, and industrial applications. Thanks to a wide scope of functionality and Ethernet communication, Easergy P3 advanced provides a cost-effective solution for the upper end of protection requirements in these applications.

Protect your staff and equipment and ensure safer operations with Easergy P3 Advanced's built-in arc flash detection and protection functions.

You will experience greater operational efficiency with rapid ordering, configuration, and operations for an unparalleled digital experience provided with Easergy P3.

Easergy P3 Advanced at a glance

Extended capabilities

- Extended protection functions, including differential of line, transformer, motor, and generator
- Arc flash detection
- All communication protocols embedded on serial and Ethernet links, including IEC 61850 ed.1 and ed. 2
- Increased number of inputs and outputs

Robust

- Best-in class reliability based on 100+ years of experience in Sepam, MiCOM and Vamp relays
- Strong tests performed in international laboratories
- Compliant with IEC electro-mechanical standards

Efficient and connected

- Easy to configure with the unique eSetup Easergy Pro setting software
- Easy to test with the virtual simulation test for direct injection of current and voltage from eSetup Easergy Pro
- Easy to use and maintain with the embedded web-HMI and EcoStruxure™ Power Device app for direct access on site via your laptop, smartphone, or tablet
- Easy to install with withdrawable rear connectors with CT shortening

PM106370

Presentation

Easergy P3 is designed to cover a large scope of applications

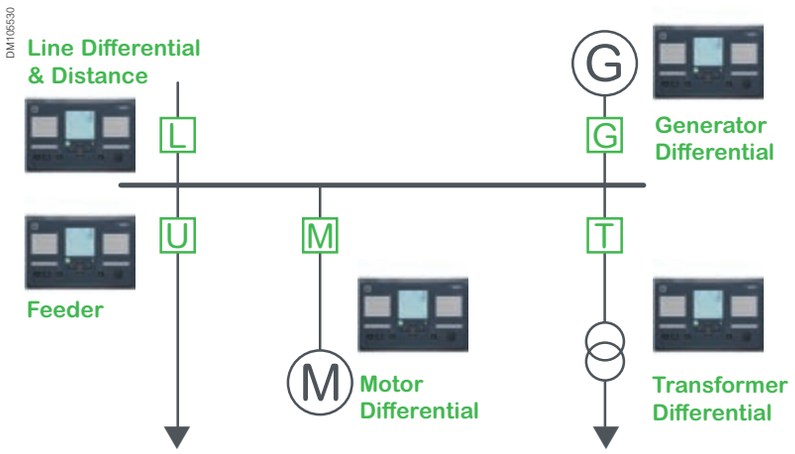

Easergy P3 Advanced is designed in **7 models, per application**:

Model		Function	
Easergy P3F	**30**	**Feeder**	Protection
Easergy P3L	**30**	**Line**	Differential and Distance
Easergy P3M	**30**	**Motor**	Protection
	32		Differential
Easergy P3G	**30**	**Generator**	Protection
	32		Differential
Easergy P3T	**32**	**Transformer**	Differential

A common set of functions extends the possibilities of protection and control:

- Single-line diagrams (mimic) in the display
- Programmable protection stages
- Programmable logics
- 2 programmable function keys
- Synchro-check function
- Direct-access USB port
- Up to 6 objects controlled
- Arc flash protection

Functional view

Easergy P3F30

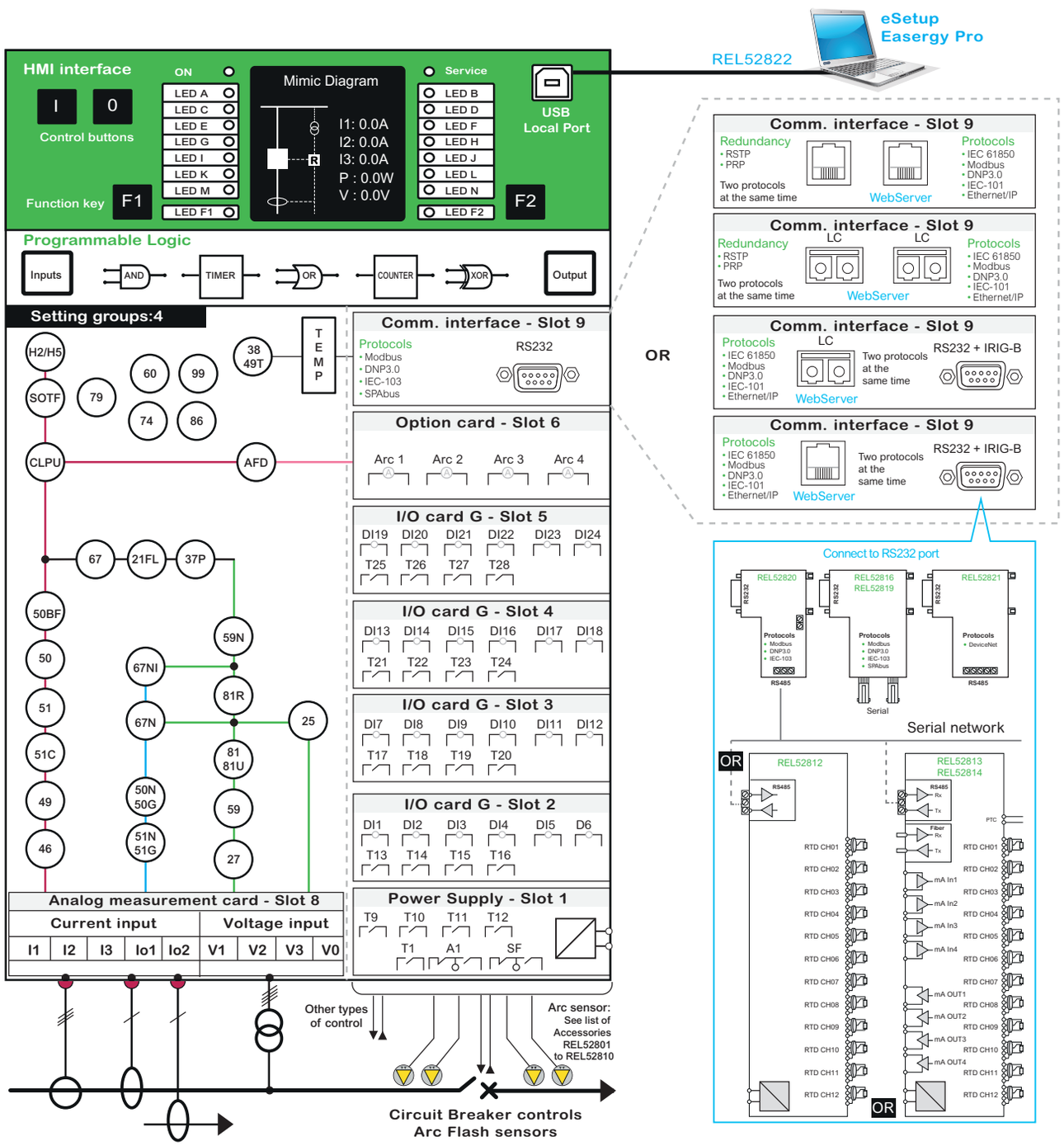

Functional view

Easergy P3M30

DM105597b

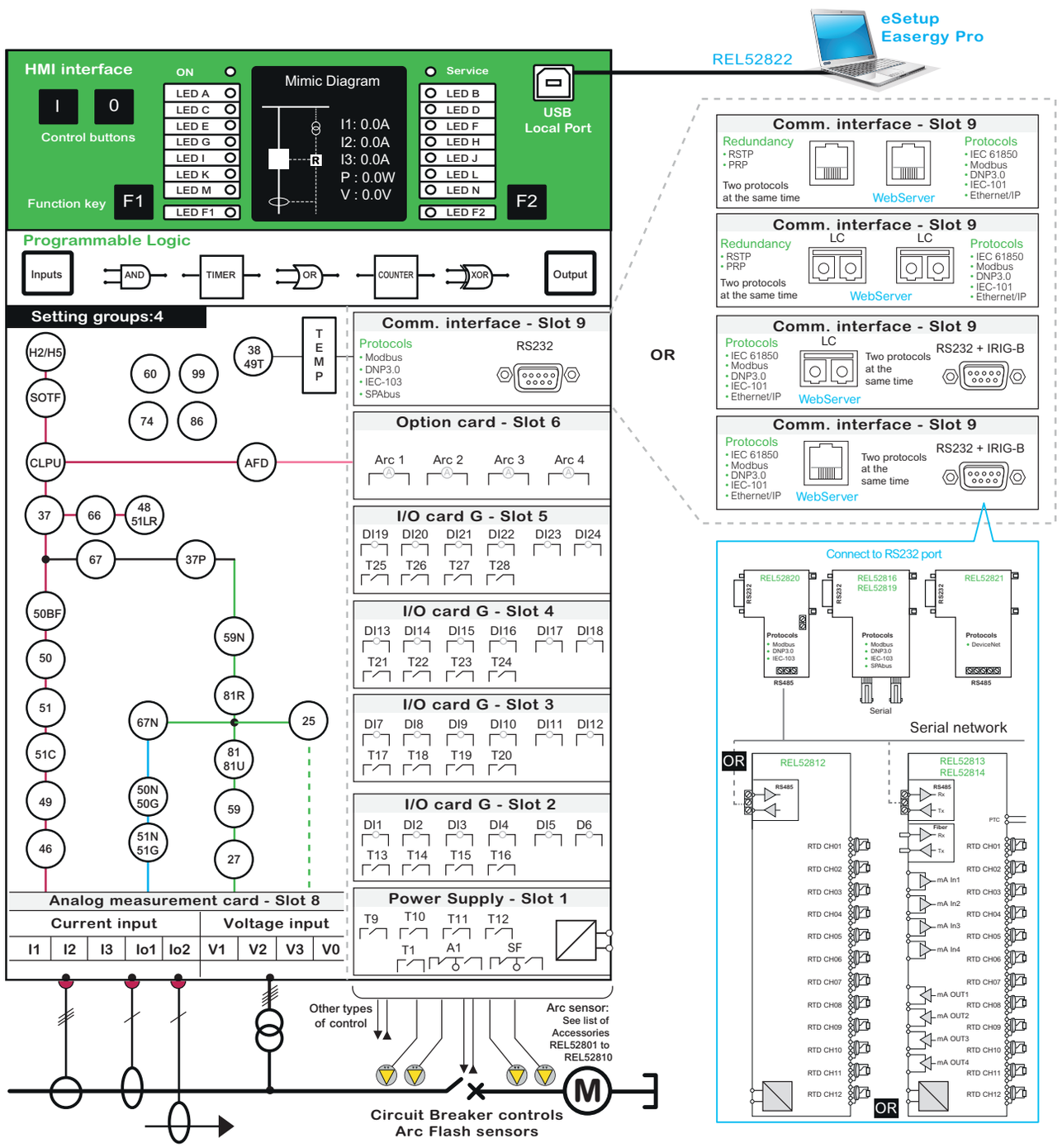

Functional view

Easergy P3M32

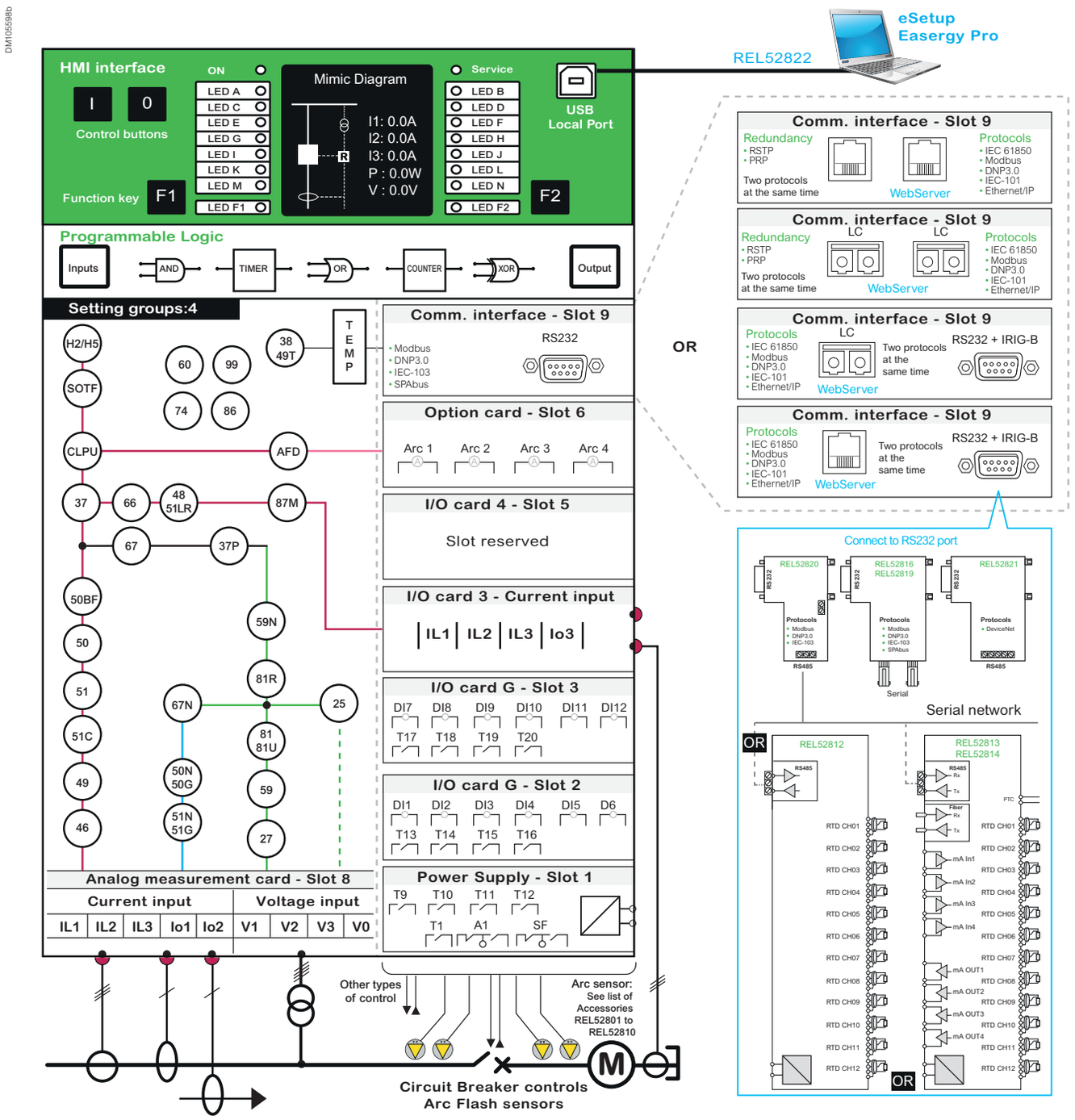

Functional view

Easergy P3T32

DM105599b

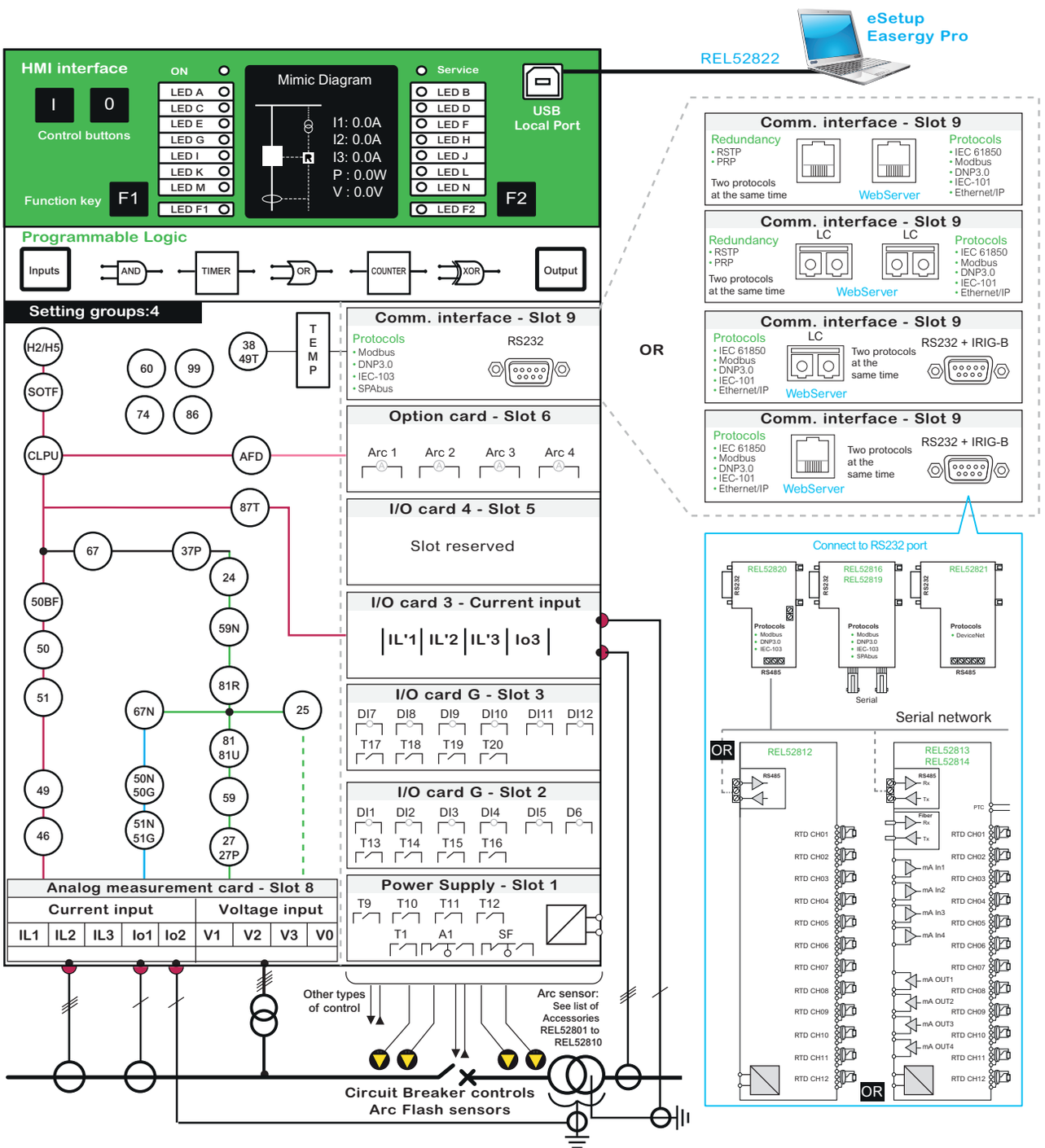

Functional view

Easergy P3L30

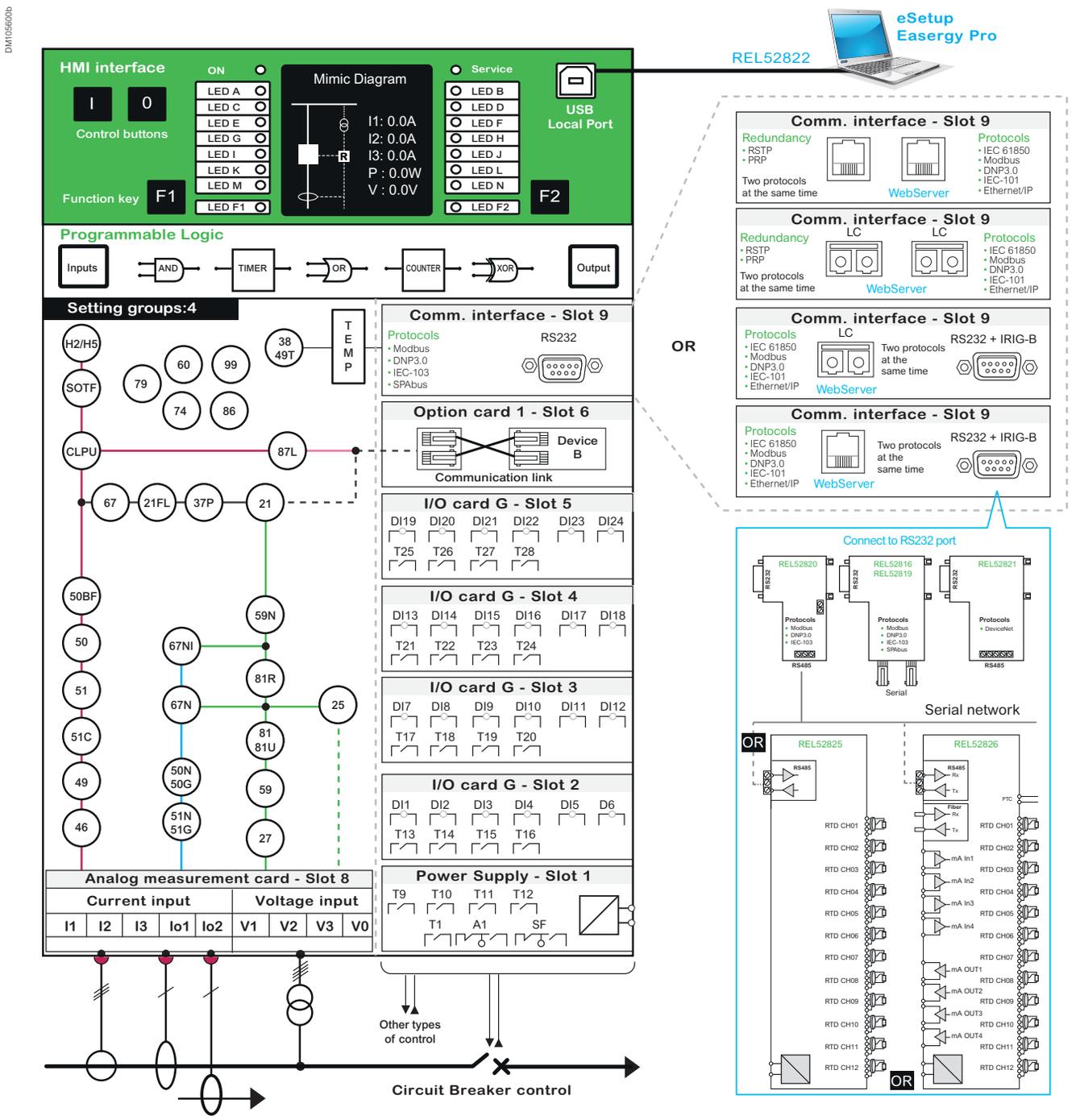

Functional view

Easergy P3G30

DM105601b

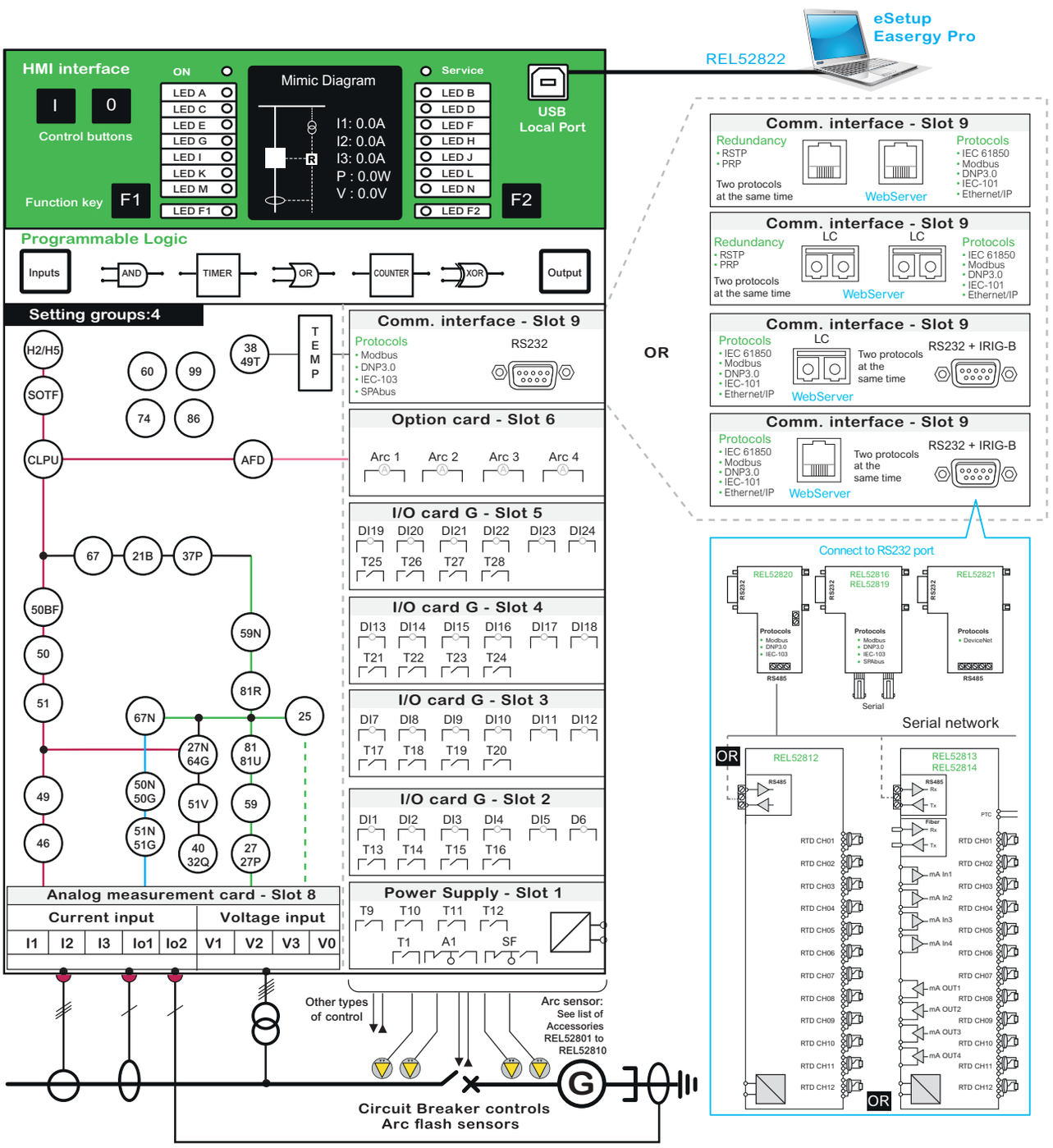

Functional view

Easergy P3G32

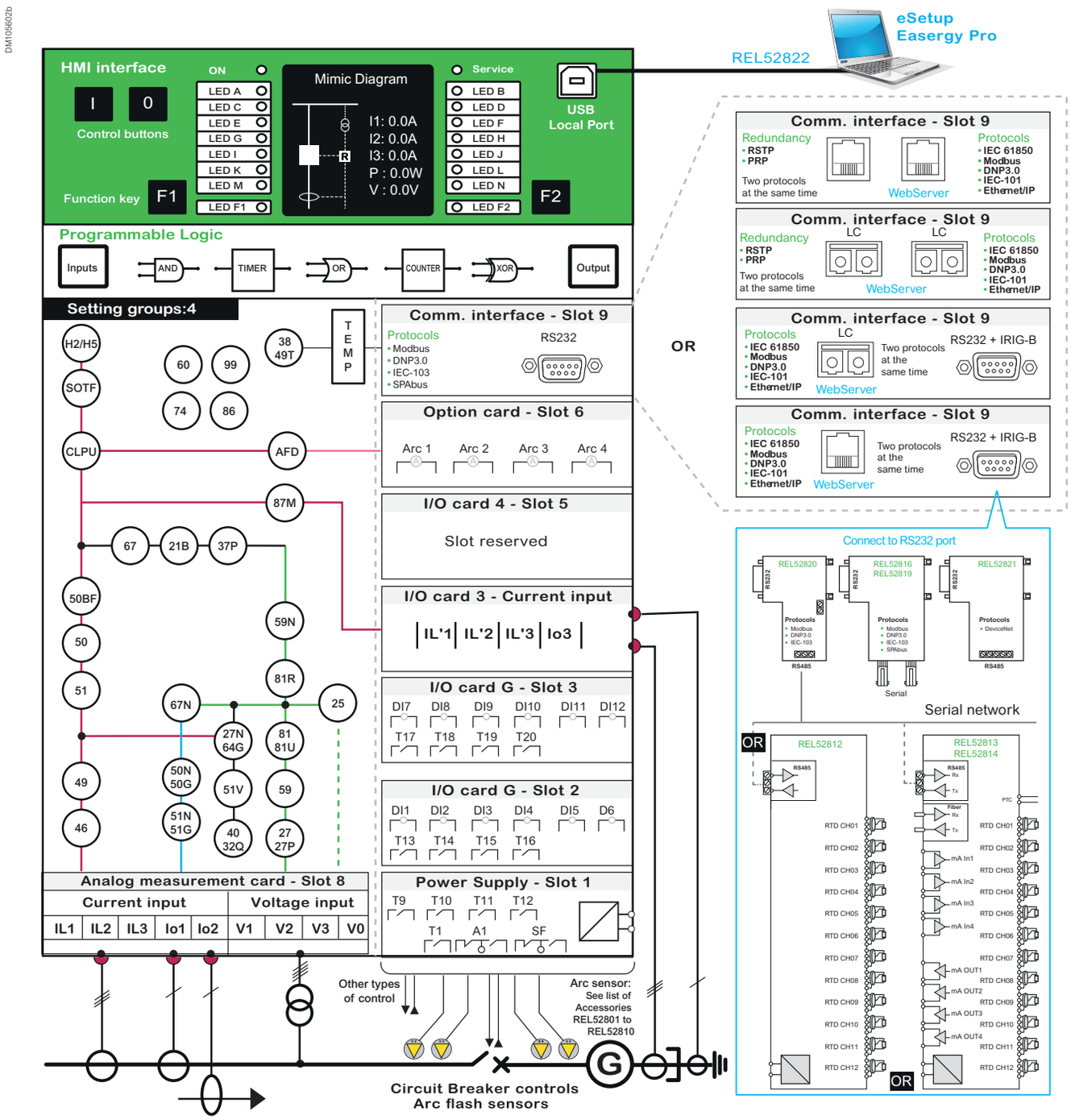

Base unit presentation

Integrated arc flash protection

Easergy P3 Advanced measures fault current, and with arc protection, also light via arc sensor channels that provide monitoring for the whole switchgear.

An arc flash is a mass of heat and pressure caused by a switchgear fault. It not only causes power outages but can also result in loss of business and extensive material damage. If an arc fault occurs in the switchgear, the arc protection system prevents the fault from spreading by tripping the circuit breaker within less than 10 ms.

Easergy P3 Advanced relays can connect up to four arc flash sensors that have continuous self-supervision to check the sensor status.

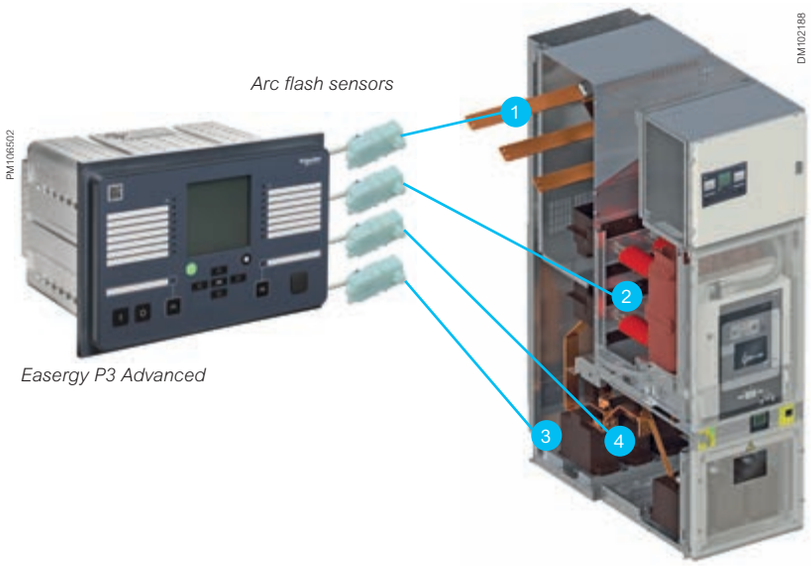

Example of application

The four arc flash sensors can be installed in specific parts of the switchgear:

1. Busbars compartment
2. Circuit breaker compartment
3. Current/voltage transformers compartment
4. Cables connections compartment

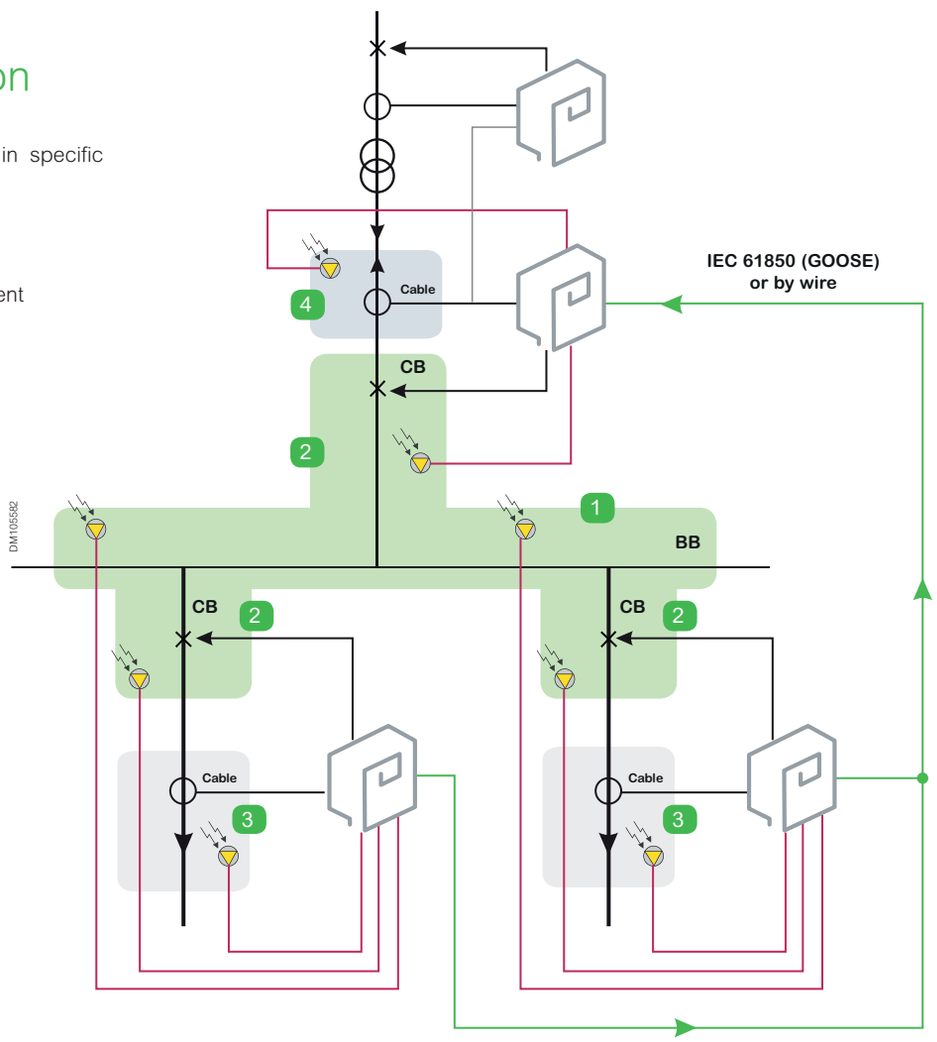

Base unit presentation

Local HMI

DM105603

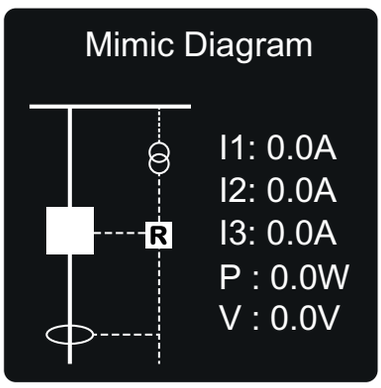

Single line diagram of the power system

Comprehensive data for easier and faster operation

All the data you require for a local equipment operation can be displayed on demand:

- Display the single line diagram and freely assignable analog values
- Display of all measurements
- Display of operation and alarm messages
- Display and setting of all parameters
- Password entry to protect parameter and protection settings

Ergonomic data presentation

- Keypad keys identified by pictograms for intuitive navigation
- Graphical 128x128 LCD screen displays any character or symbol
- Excellent display quality under all lighting conditions
- Control buttons (0/1) to operate the circuit breaker and/or others controlled object
- 14 freely programmable LEDs with 3 different colors (red, orange and green) to identify easily the message shown
- Labels are printed on a transparent film allowing customisation of the relay
- 2 programmable function keys (F1 / F2)

i	INFO push-button for viewing additional information, entering the password view, and adjusting the LCD contrast
F1	Programmable function push-button
F2	Programmable function push-button
OK	ENTER push-button for activating or confirming a function
△	UP navigation push-button for moving up in the menu or increasing a numerical value
▽	DOWN navigation push-button for moving down in the menu or decreasing a numerical value
◁	LEFT navigation push-button for moving backwards in a parallel menu or selecting a digit in a numerical value
▷	RIGHT navigation push-button for moving forwards in a parallel menu or selecting a digit in a numerical value
O	Circuit Breaker OFF push-button
I	Circuit Breaker ON push-button
⌂	HOME/CANCEL push-button for returning to the previous menu. To return to the first menu item in the main menu, press the button for at least three seconds

PM106371

Working language

All the texts and messages displayed on the Easergy P3 Advanced are available in two languages at the same time.

Base unit presentation

Rear panel

Rear panel example

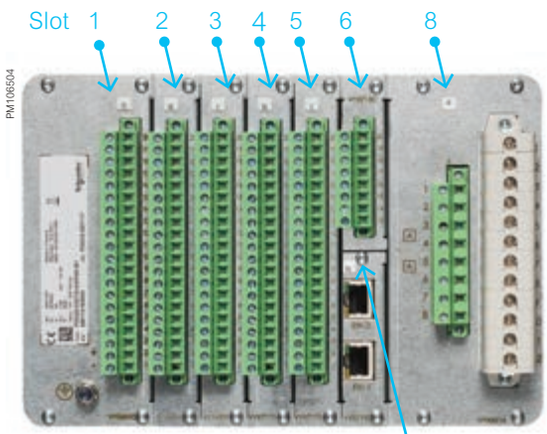

Easergy P3F30, P3M30 and P3G30

Slots description for P3x30 models

Slot 1 - Power supply and output contacts
Slot 2 - I/O card 1
Slot 3 - I/O card 2
Slot 4 - I/O card 3
Slot 5 - I/O card 4
Slot 6 - Option card 1
Slot 8 - Analog measurement card 1
Slot 9 - Communication interface

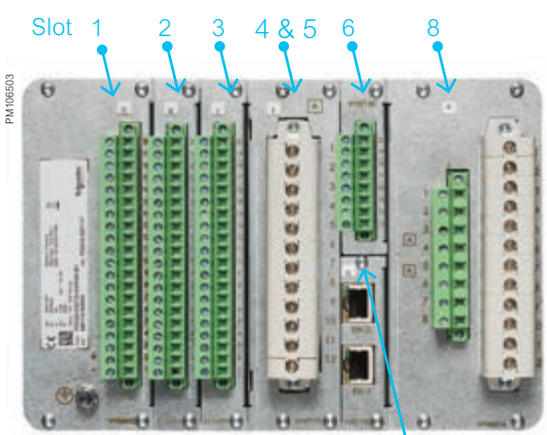

Easergy P3M32, P3T32 and P3G32

Slots description for P3x32 models

Slot 1 - Power supply and output contacts
Slot 2 - I/O card 1
Slot 3 - I/O card 2
Slot 4/5 - Analog measurement card 2
Slot 6 - Option card 1
Slot 8 - Analog measurement card 1
Slot 9 - Communication interface

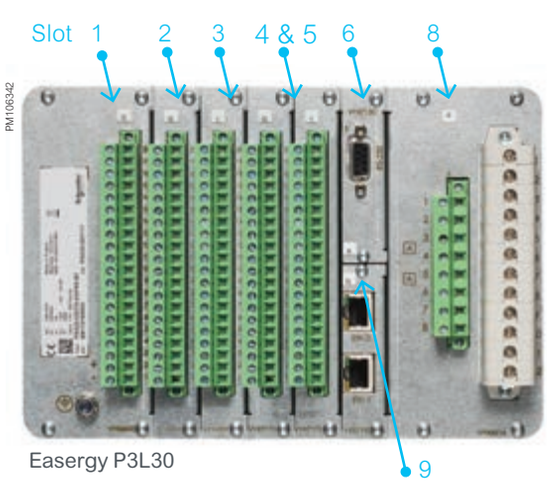

Easergy P3L30

Slots description for P3L30 models

Slot 1 - Power supply and output contacts
Slot 2 - I/O card 1
Slot 3 - I/O card 2
Slot 4 - I/O card 3
Slot 5 - I/O card 4
Slot 6 - Option card 1- Line differential com.
Slot 8 - Analog measurement card 1
Slot 9 - Communication interface

Base unit presentation

Rear panel

Description of the optional boards

C = 5 x DO heavy duty, A1, SF
D = 5 x DO heavy duty, A1, SF
A = None
G = 6DI+4DO (6 x DI, 4 x DO)
H = 6DI+4DO (6 x DI, 4 x DO(NC))
I = 10DI (10 x DI)

Digital input and output capability

The Easergy P3 Advanced has a modular concept in term of digital inputs and outputs.

Number of		Type of I/O card – P3X30				
Input	Output	Slot 1	Slot 2	Slot 3	Slot 4	Slot 5
6	11	C/D	G	None	None	None
12	15	C/D	G	G or H	None	None
18	19	C/D	G	G or H	G or H	None
24	23	C/D	G	G or H	G or H	G or H
22	16	C/D	G	G or H	I	None
32	16	C/D	G	G or H	I	I
28	19	C/D	G	G or H	G or H	I
16	11	C/D	G	I	None	None
26	11	C/D	G	I	I	None
36	11	C/D	G	I	I	I

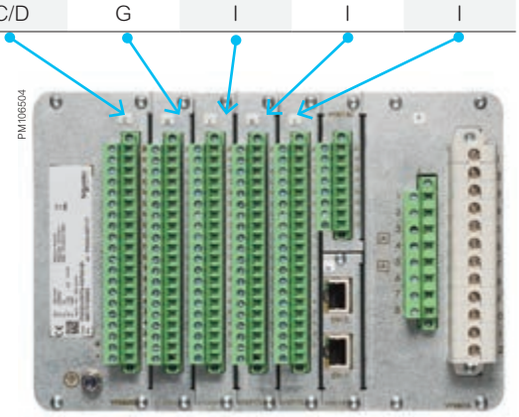

P3x30 units

Number of		Type of I/O card – P3X32				
Input	Output	Slot 1	Slot 2	Slot 3	Slot 4	Slot 5
6	11	C/D	G	None	None	None
12	15	C/D	G	G or H	None	None
16	11	C/D	G	I	None	None

The slots 4 and 5 are used to receive the analog current input when Easergy P3 is used with differential overcurrent (ANSI 87).

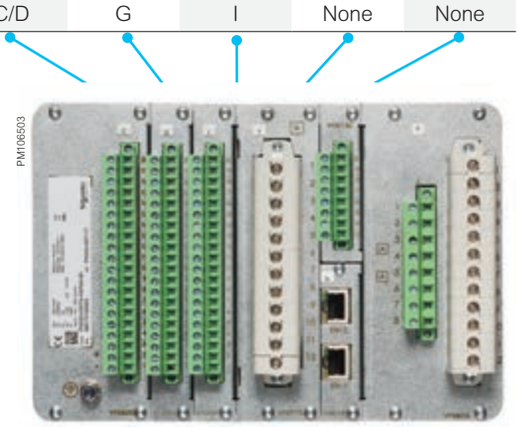

P3x32 units

Base unit presentation

Remote HMI

This mounting technique allows for a lighter door because the relay's frame is installed in the back of the secondary compartment. Communication, DI, and DO cabling is easier, too, as the door movement does not need to be considered.

In this case, only the communication between IED base and display has to be wired.

DM105604

Base unit dimensions

Dimensions

Conventional HMI

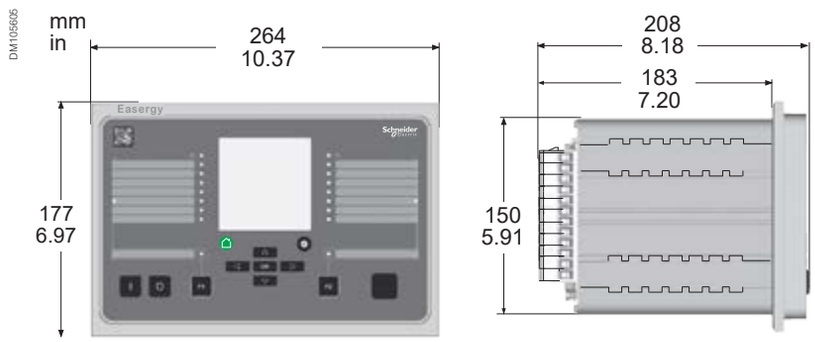

Remote HMI

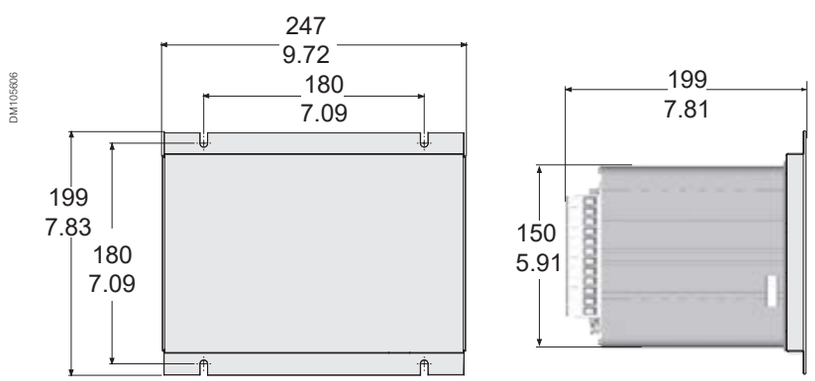

Weight (maximum)	
Easergy P3 Advanced	4.2 Kg (9.272 lb) or higher (depends of options)

Degree of protection (IEC 60529)
IP54 Front panel / IP20 Rear side

Base unit dimensions

Cut-out and mounting

Mounting

In case the depth dimension behind the compartment door is limited, the IED can be equipped with a frame (REL52832) around the collar. This arrangement reduces the depth inside the compartment by 45 mm *(1.77 in)*.

Cut-out accuracy must be complied with to ensure good withstand.

Projection mounting with the raising frame REL52832

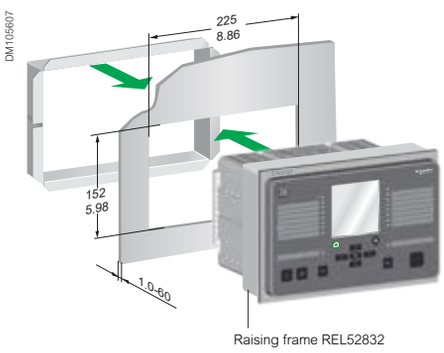

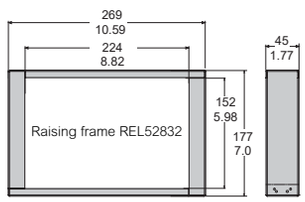

Panel mounting

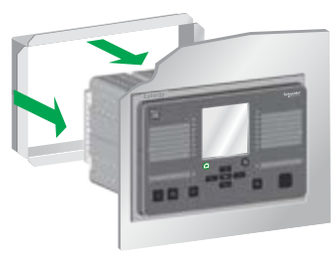

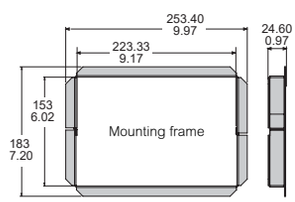

Wall mounting with remote HMI

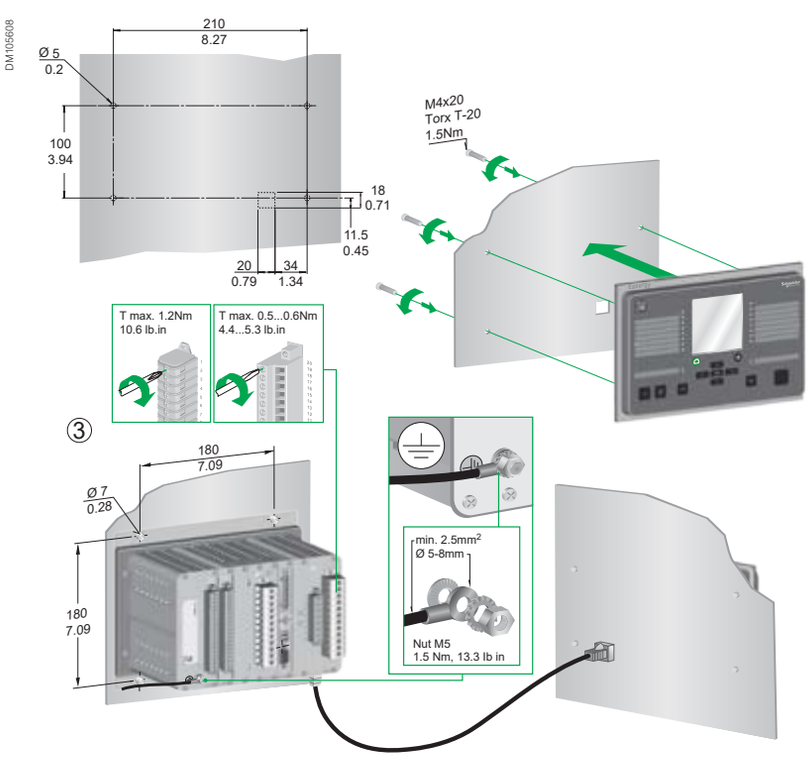

Base unit characteristics

Technical characteristics

Analog inputs

		Rated phase current	Measuring range	Input Impedance	Consumption	Rated thermal withstand	1-second overload	10-second overload
Phase Current Input (I) **Slot 8**		1 A CT	0.02 – 50 A	0.02 Ohm	0.02 VA	4 A	100 A	20 A
		5 A CT	0.05 – 250 A	0.003 Ohm	0.075 VA	20 A	500 A	100 A
Residual Current Input (I0) **Slot 8 - 5 A CT** Configurable for CT secondaries 0.1 to 10A			0.015 – 50 A	0.003 Ohm	0.075 VA	20 A	500 A	100 A
Residual Current Input (I0') **Slot 8 - 1 A CT** Configurable for CT secondaries 0.1 to 10.0A			0.003 – 10 A	0.02 Ohm	0.02 VA	4 A	100 A	20 A
Residual Current Input (I0') **Slot 8 - 0.2 A CSH sensor** Configurable for CT secondaries 0.1 to 10.0A			0.0006 – 2 A	0.02 Ohm	0.02 VA	0.8 A	20 A	4 A
Phase Current Input - (I') **Slot 4** (Only for device with differential overcurrent)		1A CT	0.02 – 50 A	0.02 Ohm	0.02 VA	4 A	100 A	20 A
		5A CT	0.05 – 250 A	0.003 Ohm	0.075 VA	20 A	500 A	100 A
Residual Current Input (I0'') **Slot 4** (Only for device with differential overcurrent)		1A CT	0.02 – 50 A	0.02 Ohm	0.02 VA	4 A	100 A	20 A
		5A CT	0.05 – 250 A	0.003 Ohm	0.075 VA	20 A	500 A	100 A
Voltage Input Configurable for VT secondaries 50 to 120 V			0.5 – 190 V (100V / 110 V)	n.a.	< 0.5 VA	250 V (Continuously)	n.a.	600 V

Analog temperature input / Analog output

		Pt100	Ni100	Ni120	Cu10
Type of temperature sensor					
Maximum distance between sensor and module		up to 2,000 m(1)	up to 2,000 m (1)	up to 2,000 m (1)	up to 2,000 m (1)
Analog Output	Minimum current	0 mA			
	Maximum current	20 mA			
Operating temperature:		0°C (32°F) to +55°C (131°F)			
Power supply	REL52811 / REL52812	24 to 230 Vac/dc, 50/60 Hz			
	REL52813	24 Vdc			
	REL52814	48 to 230 Vac/dc, 50/60 Hz			

Digital Input

Nominal operation voltage	DI1 to DI16	24 to 230 Vac/dc	110 to 230 Vac/dc	220 to 230 Vac/dc
Typical switching threshold		12 Vdc	75 Vdc	155 Vdc
Input limit voltage	At state 1	≥ 19.2 Vdc	≥ 88 Vdc	≥ 176 Vdc
	At state 0	< 10.0 Vdc	< 60 Vdc	< 140 Vdc
Frequency		45 to 65 Hz	45 to 65 Hz	45 to 65 Hz
Typical consumption		<4 mA (typical approx. 3 mA)		
Voltage withstand		255 V ac/dc		

Digital Output

Type of contact		Control and Trip contact, Tx	Signal contact, A1	Signal Contact, SF
Rated Voltage		250 Vac/dc	250 Vac/dc	250 Vac/dc
Continuous current		5 A	5 A	5 A
Breaking capacity	AC	2.000 VA	2.000 VA	2.000 VA
	DC (L/R=40ms) at 48 V dc	1.15 A	1 A	1 A
	DC (L/R=40ms) at 110 V dc	0.5 A	0.3 A	0.3 A
	DC (L/R=40ms) at 220 V dc	0.25 A	0.15 A	0.15 A
Making capacity	≤ 0.5 s	30 A	30 A	-
	≤ 3.0 s	15 A	15 A	-
Minimum making capacity		100 mA @ 24 Vac/dc	100 mA @ 24 Vac/dc	100 mA @ 24 Vac/dc
Typical operation time		<8 ms	-	-
Contact material		AgNi 90/10	AgNi 0.15	AgNi 0.15

Power supply

Nominal Voltage	110-240 V ac/dc	24-48 Vdc
Range	-20% / +10% (88 to 264 Vac/dc)	-20% / +20% (19.2 to 57.6 Vdc)
Inrush current (DC)	25 A with time constant of 1000 µs	
	25 A with time constant of 750 µs	
	15 A with time constant of 500 µs	
Power consumption	Power consumption increases when more I/O or optional I/O or communication cards are used Max. 50 W	
Acceptable momentary outages	<50 ms (110 Vdc)	

(1) 78,740 in

Base unit characteristics

Environmental characteristics

Disturbance tests

	Standard and test class/level	Test value
Emission	**IEC/EN 60255-26 (ed3)**	
Conducted	EN 55022, Class A / CISPR 22	0.15 – 30 MHz
Emitted	EN 55011, Class A / CISPR 11	30 – 1000 MHz
Immunity	**IEC/EN 60255-26 (ed3)**	
Slow damped oscillatory wave 1MHz	IEC/EN 61000-4-18	±2.5kVp CM ±2.5kVp DM
Fast damped oscillatory wave 3MHz, 10 MHz and 30 MHz	IEC/EN 61000-4-18	±2.5kVp CM
Static discharge (ESD)	IEC/EN 61000-4-2 Level 4	±8 kV contact ±15 kV air
Emitted HF field	IEC/EN 61000-4-3 Level 3	80 - 2700 MHz, 10 V/m
Fast transients (EFT)	IEC/EN 61000-4-4 Level 4	±4 kV, 5/50 ns, 5 kHz
Surge	IEC/EN 61000-4-5 Level 4	±4 kV, 1.2/50 µs, CM ±2 kV, 1.2/50 µs, DM
Conducted HF field	IEC/EN 61000-4-6 Level 3	0.15 - 80 MHz, 10 Vrms
Power-frequency magnetic field	IEC/EN 61000-4-8	300A/m (continuous) 1000 A/m 1 – 3 s
Pulse magnetic field	IEC/EN 61000-4-9 Level 5	1000A/m, 1.2/50 µs
ac and dc voltage dips	IEC/EN 61000-4-29, IEC/EN 61000-4-11	0% of rated voltage • ac: ≥ 0.5 cycle • dc: ≥ 10 ms 40% of rated voltage • ac: 10 cycles • dc: 200 ms 70% of rated voltage • ac: 25 cycles • dc: 500 ms
ac and dc voltage interruptions	IEC/EN 61000-4-29, IEC/EN 61000-4-11	100% interruption • ac: 250 cycles • dc: 5 s
Voltage alternative component	IEC/EN 61000-4-17	15% of operating voltage (dc) / 10 min

Mechanical robustness

	Standard and test class/level	Test value
In operation		
Vibrations	IEC 60255-21-1, Class II / IEC 60068-2-6, Fc	1 Gn, 10 Hz – 150 Hz
Shocks	IEC 60255-21-2, Class II / IEC 60068-2-27, Ea	10 Gn / 11 ms
Seismic	IEC 60255-21-3 Method A, Class II	2G horizontal / 1G vertical , 1–35 Hz
De-energized		
Vibrations	IEC 60255-21-1, Class II / IEC 60068-2-6, Fc	2 Gn, 10 Hz – 150 Hz
Shocks	IEC 60255-21-2, Class II / IEC 60068-2-27, Ea	30 Gn / 11 ms
Bump	IEC 60255-21-2, Class II / IEC 60068-2-27, Ea	20 Gn / 16 ms

Base unit characteristics

Environmental characteristics

Electrical safety

	Standard and test class/level	Test value
In operation		
Impulse voltage withstand	IEC/EN 60255-27	5 kV, 1.2/50 µs, 0.5 J 1 kV, 1.2/50 µs, 0.5 J Communication
Dielectric test	IEC/EN 60255-27	2 kV, 50 Hz 0.5 kV, 50 Hz Communication
Insulation resistance	IEC/EN 60255-27	
Protective bonding resistance	IEC/EN 60255-27	
Clearance and creepage distance	Design criteria for distances as per IEC 60255-27 Annex C (pollution degree 2, overvoltage category 3)	
Power supply burden	IEC 60255-1	

Environmental tests

	Standard and test class/level	Test value
In operation		
Dry heat	EN / IEC 60068-2-2, Bd	70°C *(158°F)*
Cold	EN / IEC 60068-2-1, Ad	-40°C *(-40°F)*
Damp heat, cyclic	EN / IEC 60068-2-30, Db	From 25°C (77°F) to 55°C (131°F) From 93% RH to 98% RH Testing duration: 6 days
Damp heat, static	EN / IEC 60068-2-78, Cab	40°C (104°F) 93% RH Testing duration: 10 days
Change of temperature	IEC / EN 60068-2-14, Nb	Lower temp -40°C *(-40°F)* Upper temp 70°C *(158°F)* 5 cycles
Flowing mixed gas corrosion test, method 1	IEC 60068-2-60, Ke	25°C (77°F), 75% RH, 21 days 100 ppb H2S, 500 ppb SO_2
Flowing mixed gas corrosion test, method 4	IEC 60068-2-60, Ke	25°C (77°F), 75% RH, 21 days 10 ppb H2S, 200 ppb NO_2, 10 ppb CL_2 , 200 ppb SO_2
In storage		
Dry heat	EN / IEC 60068-2-2, Bb	70°C (158°F)
Cold	EN / IEC 60068-2-1, Ab	-40°C (-40°F)

Environmental conditions

Ambient temperature, in-service	-40°C – 60°C *(-40°F – 140°F)* (1)	
Ambient temperature, storage	-40°C – 70°C *(-40°F – 158°F)*	
Relative air humidity	< 95%, no condensation allowed	
Maximum operating altitude	2000 m (6561.68 ft)	

(1) with 1 x raising frame -> maximum ambient temperature 55°C *(+131°F)*
with 2 x raising frame -> maximum ambient temperature 50°C *(+122°F)*

Communication

Communication protocols

Easergy P3 Advanced can be connected to networks, providing access to the following type of data:

- Events
- Status information
- Measurements
- Control commands
- Clock synchronizing
- Settings (SPA-bus and embedded SPA-bus only)

PM106362

EcoStruxure™ Power Device app

Main Protocols

Easergy P3 Advanced can be connected directly to serial and/or Ethernet protocols with two different protocols at the same time, selected by eSetup Easergy Pro software.

Communication protocols:

Serial protocols - RS232 / RS485 / serial Fiber Optic (*) port
Modbus RTU
DNP3.0
IEC 60870-5-101
IEC 60870-5-103
DeviceNet (*)
ProfibusDP (*)
SPA-Bus (*)
Ethernet protocols - RJ45 / LC port
IEC61850 ed1 & ed2
Modbus TCP
IEC60870-5-101
DNP3.0
Ethernet IP

Communication ports:

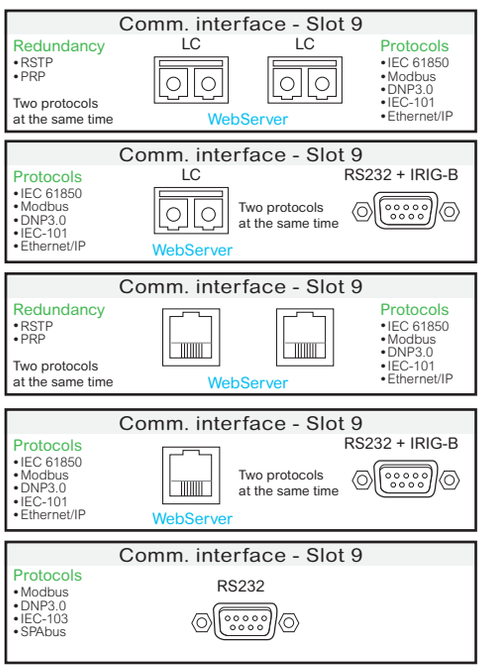

**Need external accessories to connect.*

PM106576

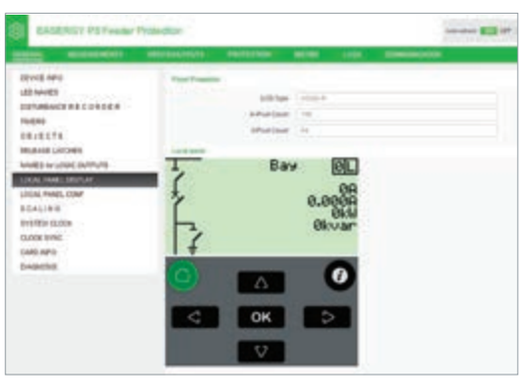

Easergy P3 web-HMI

Redundancy protocols (RSTP or PRP)

When the devices are connecting in Ethernet link and demand for higher availability, Easergy P3 Advanced can use Rapid Spanning Tree Protocol (RSTP) or Parallel Redundancy Protocol (PRP) to recover from a network failure.

Easergy P3 web-HMI

A webserver is available in all Easergy P3 Advanced to get information from the device to monitoring all data, send command and change protection setting.

Programmable stages

Programmable protection function

Personalize your protection function

Easergy P3 Standard enables you to create or personalize the protection function when you need to achieve specific levels of protection.

There are now eight stages available to use with various applications. Each stage can monitor any analog (measured or calculated) signal and issue start and trip signals. Programmable stages extend the protection functionality of the manager series to a new level. The Programmable stage has the possibility of comparing two freely selectable signals between each other. Using this feature you can create a comparison function using the relay's own measured or calculated signals. One or both of the signals can be connected to the comparison function over GOOSE.

For example, if four stages of frequency are not enough, it is possible to reach a maximum of 12 using programmable stages. Other examples include using the stages to issue an alarm when there are too many harmonics (THD) or indicating reverse power condition by GOOSE.

EM100170

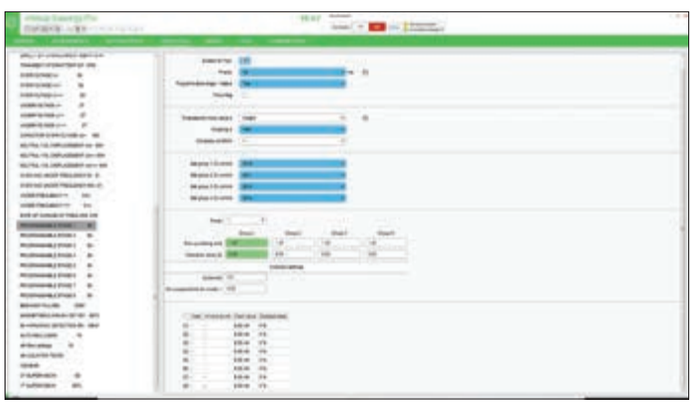

Circuit breaker control

With Easergy P3 Advanced, you get intuitive functionality to protect your electrical network system.

Main CB functions are:

- Trip circuit supervision (ANSI 74)
- CT/VT supervision (ANSI 60/60FL)
- Latching (ANSI 86)
- CB close/open order
- Number of operations
- Circuit breaker operating time
- Charging time
- Cumulative breaking current
- Personalized functions

Maximize circuit breaker control

Easergy P3 Advanced is the simplest protection relay with mimic diagram with control buttons (open and close), two personalized function keys and 14 configurable bicolor LEDs. You can manage the control without external or additional components.

Example of implementation

The schematic is structured for typical use in MV switchgear, 100% adapted for your use case. You can change the internal logic to adapt the Easergy P3 to meet your needs.

If a problem occurs, clear and concise information allows users to make the right decisions at the right time.

This electrical schematic can facilitate the IEC 61850 implementation because all the logics are done by the protection unit that will make the decisions and, if necessary, send GOOSE messages to other units.

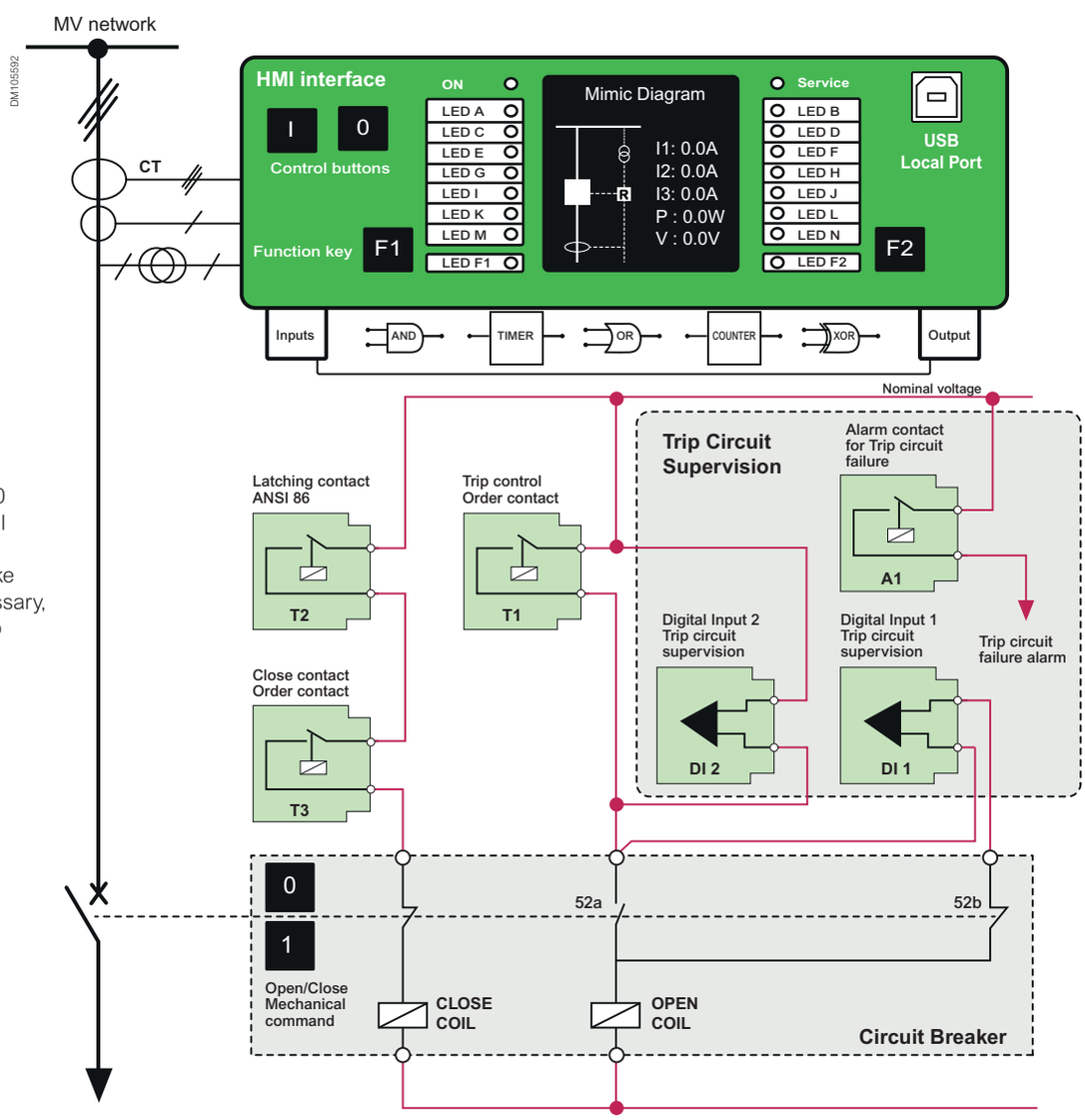

Power quality measurements

DM105651

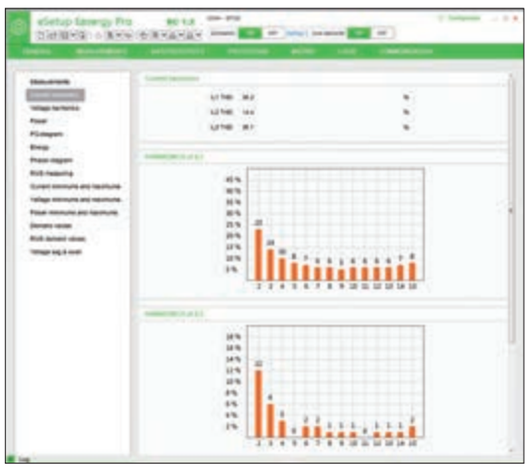

Power quality

The power quality of electrical networks has become increasingly important in modern society. Sophisticated loads, such as computers and automation systems, require an uninterrupted supply of “clean” electricity. Easergy P3 Advanced provides integrated power quality measuring and analysis functions, which help to reduce variations in the quality of the distributed power. The terminal supervises the harmonics of phase currents and voltages from the 2nd to the 15th order and the THD (total harmonic distortion)..

One of the most important power quality functions is the monitoring of voltage sags and swells. Easergy P3 Advanced provides separate monitoring logs for sags and swells. The fault log comprises four registers for voltage sags and another four for voltage swells.

The disturbance recorder functionality can be used for recording measured currents and voltages and for recording status information of digital inputs and outputs, also including the signals of the arc protection system. The time stamped recordings provide indispensable information for the subsequent analysis of a fault situation.

Example of harmonics content and voltage sag/swell registration
(obtained from an Easergy P3 Advanced protection relay)

Many functions in modern society rely heavily on electrical energy, so the quality of the energy supply is gaining increased importance..

Power Quality data in Easergy P3 Advanced	
THD of IL1, IL2 and IL3	Total harmonic distortion of phase currents
H of IL1, Il2 and IL3	Harmonics phase current up to 15th
THD of U	Total harmonic distortion of phase to phase or phase to ground voltages
H of U	Harmonic of phase to phase or phase to ground voltage up to 15th
Sag and swell	
Voltage interruptions	

Connection diagrams

Easergy P3x30

⚠ DANGER

HAZARD OF ELECTRIC SHOCK, ELECTRIC ARC OR BURNS

- only qualified personnel should install this equipment. Such work should be performed only after reading this entire set of instructions.
- NEVER work alone.
- turn off all power supplying this equipment before working on or inside it. Consider all sources of power, including the possibility of backfeeding.
- always use a properly rated voltage sensing device to confirm that all power is off.
- start by connecting the device to the protective earth and to the functional earth.
- screw tight all terminals, even those not in use.

Failure to follow these instructions will result in death or serious injury.

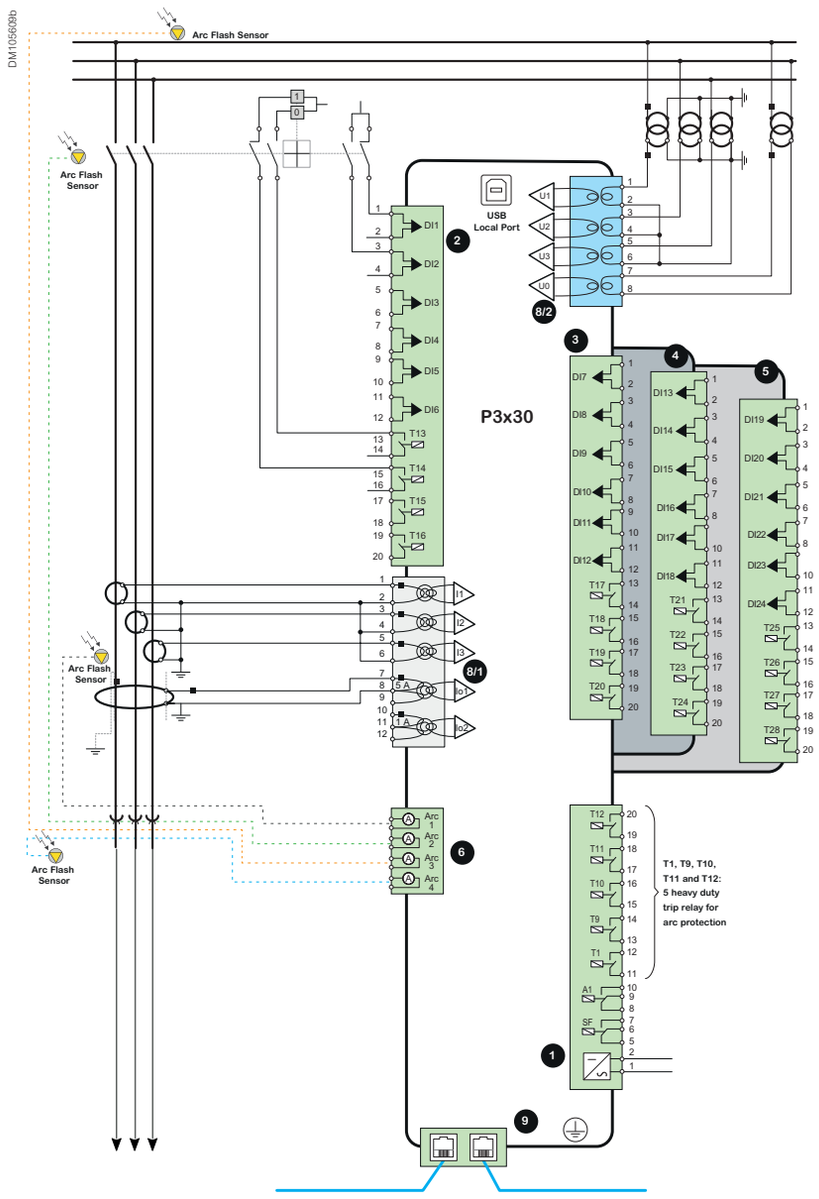

Note: Dangerous environment, make sure to read the all information, including warning instructions (left).

Connection diagrams

Easergy P3x32

⚠ DANGER

HAZARD OF ELECTRIC SHOCK, ELECTRIC ARC OR BURNS

- only qualified personnel should install this equipment. Such work should be performed only after reading this entire set of instructions.
- NEVER work alone.
- turn off all power supplying this equipment before working on or inside it. Consider all sources of power, including the possibility of backfeeding.
- always use a properly rated voltage sensing device to confirm that all power is off.
- start by connecting the device to the protective earth and to the functional earth.
- screw tight all terminals, even those not in use.

Failure to follow these instructions will result in death or serious injury.

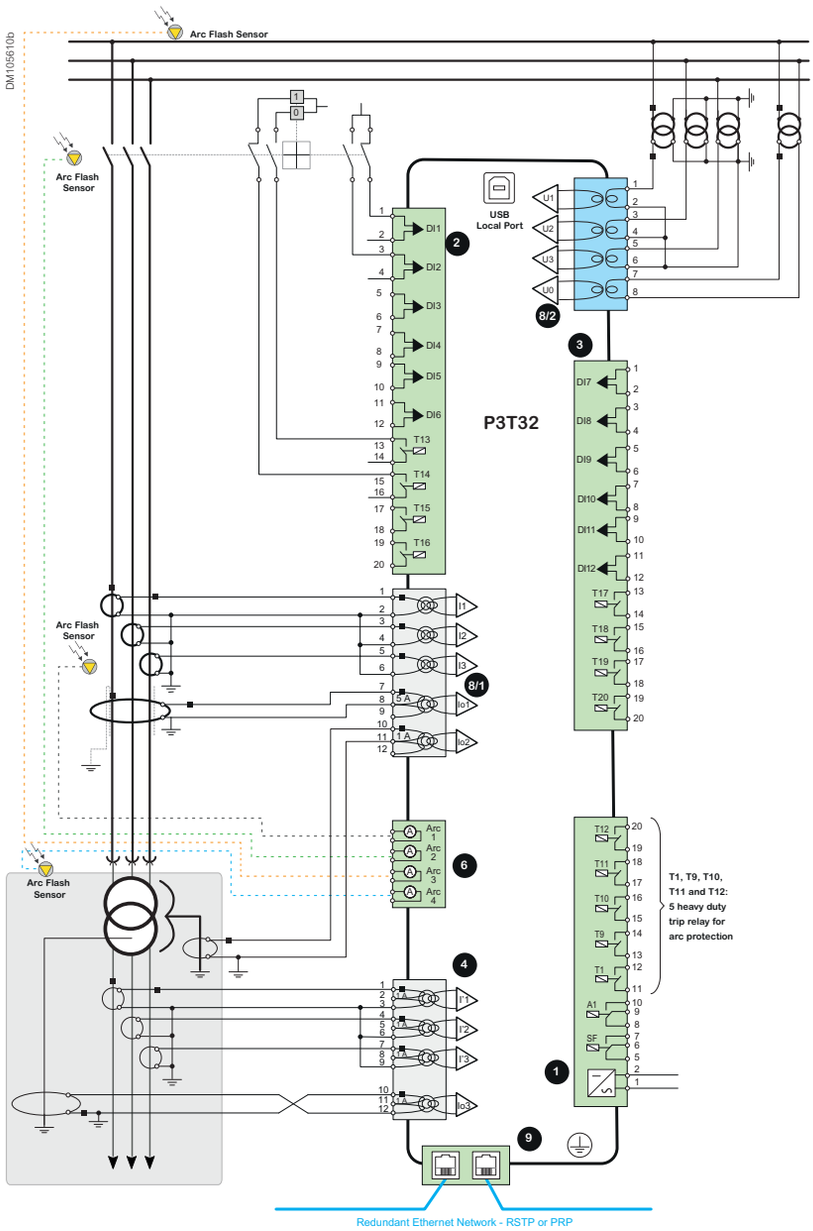

Note: Dangerous environment, make sure to read the all information, including warning instructions (left).

Connection diagrams

Easergy P3L30

⚠ DANGER

HAZARD OF ELECTRIC SHOCK, ELECTRIC ARC OR BURNS

- only qualified personnel should install this equipment. Such work should be performed only after reading this entire set of instructions.
- NEVER work alone.
- turn off all power supplying this equipment before working on or inside it. Consider all sources of power, including the possibility of backfeeding.
- always use a properly rated voltage sensing device to confirm that all power is off.
- start by connecting the device to the protective earth and to the functional earth.
- screw tight all terminals, even those not in use.

Failure to follow these instructions will result in death or serious injury.

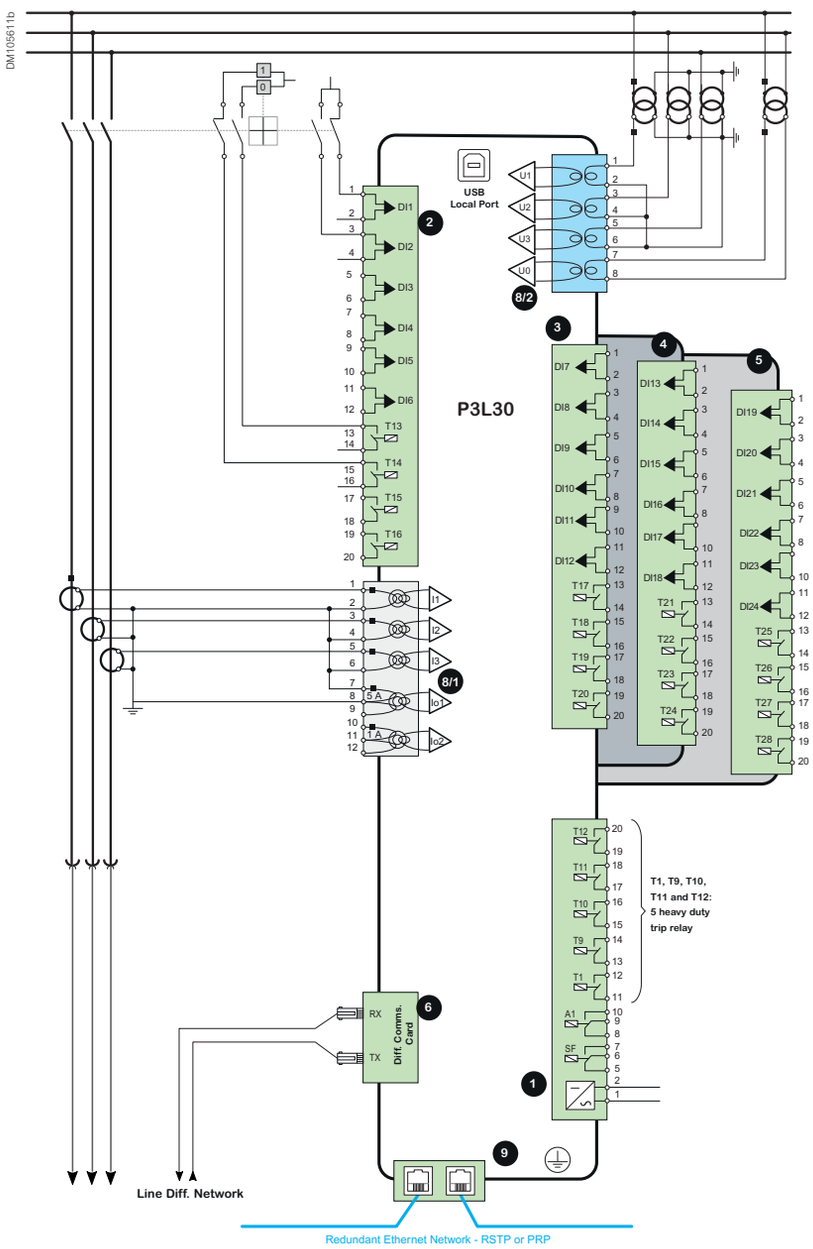

Note: Dangerous environment, make sure to read the all information, including warning instructions (left).

Model selection

Selecting product

Please, consult the “Ordering” section to choose specific characteristics in the relays for your system:

PM106371

P3F30 Feeder application	Page 109
P3L30 Line application	Page 110
P3M30 Motor application	Page 111
P3G30 Generator application	Page 112

PM106371

P3T32 Transformer with differiential application	Page 113
P3M32 Motor with differential application	Page 114
P3G32 Generator with differrential application	Page 115

Or use our web configuration tool:

Go to web configurator

Notes

Easergy digital experience

Easergy digital experience

Easergy P3 software	**80**
Presentation	80
eSetup Easergy Pro	**82**
eSetup Easergy Pro during engineering	82
eSetup Easergy Pro during commissioning	83
eSetup Easergy Pro during operation	84
Easergy web-HMI	**85**
Mobile application	**86**

Easergy P3 software

Presentation

Minimum requirements for running eSetup Easergy Pro:

- **Windows 7 or higher**
- **512 MB RAM**
- **50 MB Disk space**

eSetup Easergy Pro

eSetup Easergy Pro offers full facilities to set up Easergy relays. Intuitive and simple, eSetup Easergy Pro is a user-oriented interface to assist you during the engineering, commissioning and operation of Easergy protection relays.

It's streamlined workflow and graphical representations has been designed to smooth your configuration process.

The software is available for download on the Schneider Electric website.

Use eSetup Easergy Pro in standalone mode during engineering to prepare the configuration.

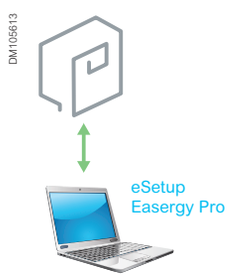

Connect the PC running eSetup Easergy Pro to the USB port of the Easergy protection relay during commissioning to adjust the settings and test the relay.

For connection to Easergy P3, use the REL52822 connection cord

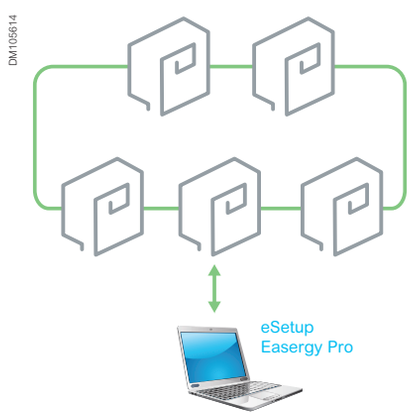

Connect the PC running eSetup Easergy Pro to the Ethernet network during operation to retrieve data from the relays and update the system.

Easergy P3 software

Presentation

eSetup Easergy Pro at each step of the digital life

DM105615

eSetup Easergy Pro

During engineering

- Create the configuration of the Easergy P3 relay: select the appropriate options and receive the order code
- Set the characteristics of the CTs, VTs, or sensors connected to the relay, and select the protection functions that will be activated and their settings
- Build a specific logic, if required, using a graphic editor
- Map the digital inputs of the relay and different internal signals to the relevant functions, LEDs, and digital outputs, using a straightforward matrix format.
- Draw the single-line diagram that will appear on the front display of the relay for switchgear control and select the measurements that will be displayed. If any, build the interlocking logic using a matrix format
- For IEC 61850 protocol, configure the data set and the report control blocks that will be published and select the GOOSE data to which you want to subscribe
- Complete the setting of additional functions (disturbance recorder, event logging system, clock synchronization, etc.).

EM106160

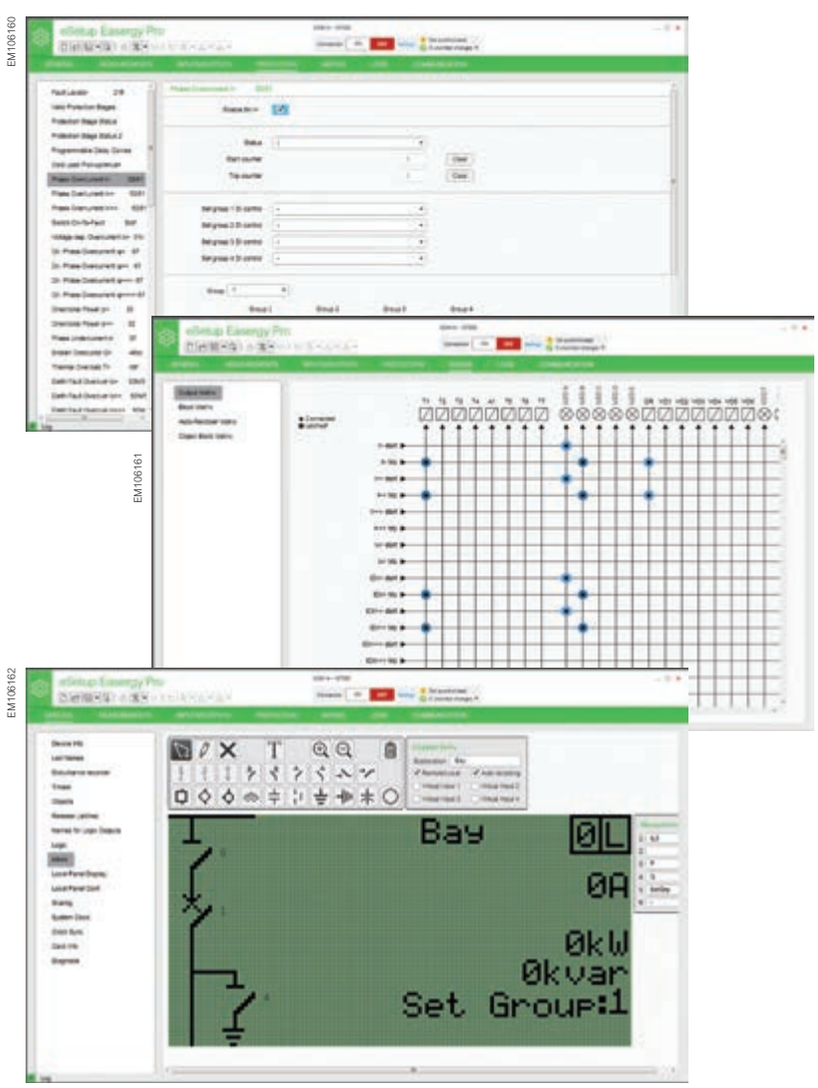

eSetup Easergy Pro

During commissioning

- Connect to the front panel of one single relay or access several relays by connecting to Ethernet
- Open the Digital Inputs menu to check the status of inputs. Reverse the polarity or add a filtering delay if necessary
- Open the Relays menu and force the status change of the output relays in order to check the wiring.
- Open the Phasor Diagram menu to see in real time the phasor of injected currents and voltages and the value
- Use virtual injection for testing protection settings and circuit breaker tripping and for checking LEDs and connected outputs
- Open the Logic or the Matrix menu if the logic needs to be tested. The active signals appear in a different color and are updated in real time. Changes in the logic or in the matrix can be made and applied to the relay smoothly.

EM106163

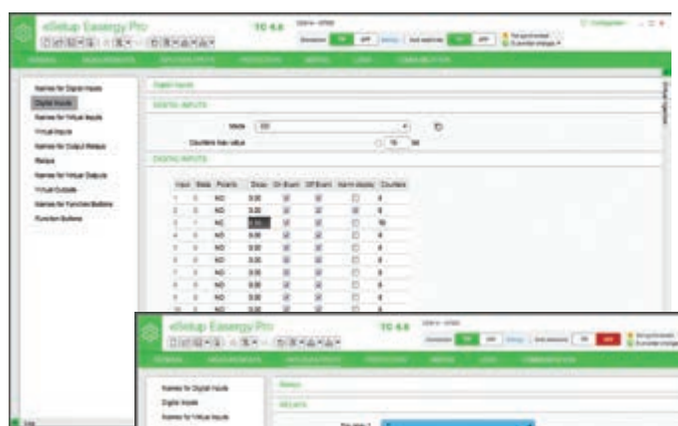

EM106164

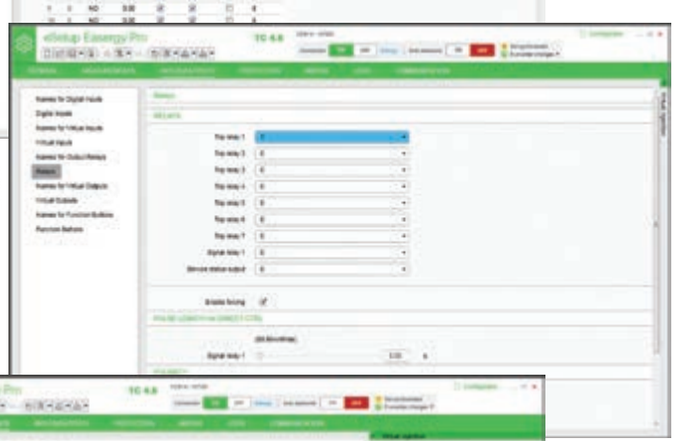

EM106165

eSetup Easergy Pro

During operation

- Connect to the front panel of a single relay or gain access to several relays by connecting to Ethernet
- During normal operation, get the most of the metering capabilities of the Easergy protection relay:
  - Open the different Measurements menus to access the power monitoring and power quality data.
  - Open the disturbance recorder menu to get a waveform capture or program the recording of a power trend.
- After a trip, use eSetup Easergy Pro to understand the fault:
  - Check the fault log of the protection that has tripped the circuit breaker
  - Download the disturbance record from the Easergy P3 and display it with a disturbance recorder evaluation tool, eg. Wavewin.

EM106166

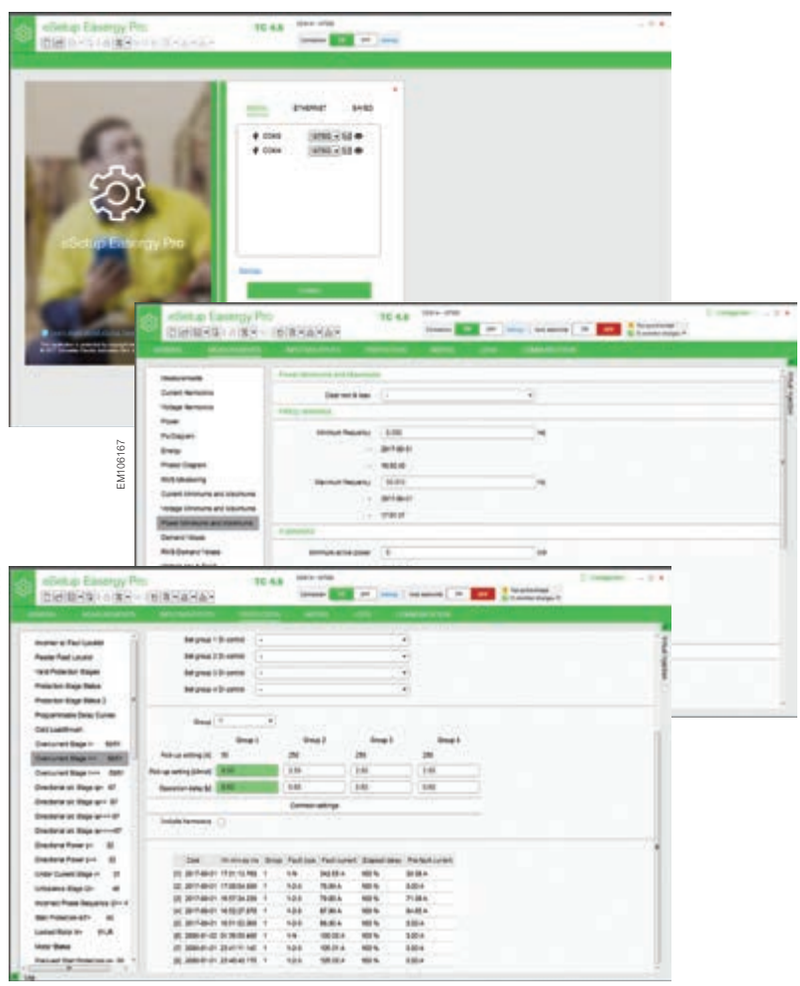

EM106167

EM106168

Easergy web-HMI

Description

Enhance operational efficiency

- **Direct access to protection and communication settings**
- **Control and monitoring of circuit breakers and switches**
- **Mirror HMI function**
- **Direct access to measurements including the graphic phasors**
- **Device diagnosis**
- **MATRIX status**
- **Access to logs and other information**

Boost operational efficiency with the embedded web-HMI

Quickly and conveniently configure, monitor, and operate your Easergy P3 protection relay with our web-HMI. The web-HMI, accessible online via IP address of the relay, doesn't require you to install specific computer software - simply use your web browser to connect to the device. You only need to enable the web server service during the initial configuration of Easergy P3 with eSetup Easergy Pro. The web-HMI is based on the same page design as eSetup Easergy Pro, making it easy to use!

Mobile application

Description

EcoStruxure™ Power Device app

Within the palm of your hand you can be connected to your Schneider Electric:

- Masterpact MTZ air circuit breaker
- TeSys GV4 motor circuit breaker
- Easergy P3 protection relays
- ... and more!

EcoStruxure Power Device app is a single mobile application with necessary information and capabilities to operate and efficiently maintain devices in the EcoStruxure architecture.

This app can be installed on your IOS and Android smartphone. The protection devices can be identified on the app by simply scanning their QR codes.

Wireless communication is possible via by WIFI, Bluetooth, NFC technologies for operation and monitoring within the proximity of the devices. Get real time notifications about the electrical installation: load levels, health status, warnings and alarms, protection settings…and more!

Free download EcoStruxure Power Device on:

Download on the App Store

GET IT ON Google Play

(1) Wi-Fi is not embedded in Easergy P3, a separate Wi-Fi router connected to an Ethernet port of the device is required.

Notes

Additional modules and accessories

Additional modules and accessories

Connection cables	90
Communication modules	92
Temperature and analogue input and output modules	94
Arc flash sensors	96

Connection cables

Description

Cables for Easergy P3 Standard

The cables can be used for connecting external option modules to the Easergy P3 Standard. The device is equipped with I/O communication model E or F, where RS232 interface is available.

PM106969

REL52825

A remote port is available when a REL52825 cable is used. The cable contains a connector for the RS-232 interface of the Easergy P3 Standard and a D9-connector for the external option module.

Length	**2.5 m** (78.74 in)

PM106980

REL52827

The cable contains a connector for the RS-232 interface of the Easergy P3 Standard and a D9-connector for the REL52815 Profibus interface module. An extension port is available for the REL52827 in Easergy P3 Standard.

Length	**3.0 m** (118.11 in)

PM106970

REL52826

Remote and extension ports are available, in addition to IRIG-B clock synchronization, when the REL52826 cable is used. The REL52826 cable contains a connector for the RS-232 interface of the Easergy P3 Standard and a 3-piece D9-connector for the external option module and IRIG-B.

Length	**2.5 m** (78.74 in)

Connection cables

Description

Cables for Easergy P3 Advanced

The cables can be used for connecting external option modules to the Easergy P3 Advanced.The device is equipped with I/O communication model B, C or D, where RS232 interface is available.

PM106978

REL52823

Remote and extension ports are available when the REL52823 cable is used. The REL52823 cable contains a connector for the RS232 interface of Easergy P3 Advanced and 2-piece D9-connector for the external option modules.

Length	**3.0 m** (118.11 in)

PM106943

REL52838

Remote and extension ports are available in addition to IRIG-B clock synchronization when the REL52838 cable is used. The REL52838 cable contains a connector for the RS232 interface of Easergy P3 Advanced and 3-piece D9-connector for the external option modules and IRIG-B.

Length	**3.0 m** (118.11 in)

PM106979

REL52824

The cable contains a connector for the RS232 interface of Easergy P3 Advanced and D9-connector for the REL52815 Profibus interface module. An extension port is available for the REL52824 in Easergy P3 Advanced.

Length	**3.0 m** (118.11 in)

Cables for all Easergy P3 models

PM106978

Front face USB Cable - REL52822

The Easergy P3 protection relays have a USB-connector in the front panel. Use eSetup Easergy Pro setting software with USB cable to set the device.

Length	**3.0 m** (118.11 in)

Communication modules

Network interface modules

PM106581

RS232 to RS485 network – REL52820

The external RS485 interface REL52820 is used to connect Easergy P3 devices to the RS485 network. With the RS485 serial interface module it is possible to have following serial protocols in use.

Characteristics	
Distance (maximum)	200 m *(7,874.02 in)*
Devices (maximum)	32
Type of fiber optic connector	PIN (3)
Type of RS232 connector	9-pin DSUB connector
RS485 type	2-wire
Serial protocols	Modbus, DNP3.0, IEC870-5-103 and SpaBus
Power supply	From RS232 port or external – 12Vdc

To connect the interface with:
Easergy **P3 Standard** devices, use **REL52825** cable
Easergy **P3 Advanced** devices, use **REL52823** cable if needed

PM106586

RS232 to fiber optic network – REL52816 to REL52819

An external fiber optic interface is used to connect Easergy P3 devices to a fiber optic loop or a fiber optic star network. The options include two different types of serial fiber optic modules.

Characteristics	REL52819	REL52816
Distance (maximum)	30 m *(1,181 in)*	1,000 m *(39,370 in)*
Type of fiber optic	Plastic-Plastic	Glass-Glass
FO diameter	1 mm	62.5/125 uM
Devices (maximum)	32	32
Type of fiber optic connector	HP Versalink Snap-in connector	ST
Interface	9-pin DSUB connector	
Serial protocols	Modbus, DNP3.0, IEC870-5-103 and SpaBus	
Power supply	From RS232 port or external – 12 Vdc	

To connect the interface with:
Easergy **P3 Standard** devices, use **REL52825** cable
Easergy **P3 Advanced** devices, use **REL52823** cable if needed

Communication modules

Network interface modules

PM106580

DeviceNet network interface – REL52821

External RS485 DeviceNet interface REL52821 is used to connect Easergy P3 devices to RS485 network using DeviceNet protocol.

Characteristics	
Distance (maximum)	200 m *(7,874.02 in)*
Devices (maximum)	32
Type of output connector	PIN
Type of RS232 connector	9-pin DSUB connector
Serial protocols	DeviceNet
Power supply	Need power feed from both RS232 port and external 24 Vdc
To connect the interface with: Easergy **P3 Standard** devices, use **REL52825** cable Easergy **P3 Advanced** devices, no additional cable required	

PM106585

Profibus network interface – REL52815

External Profibus interface REL52815 is used to connect Easergy P3 devices to the Profibus network.

Characteristics	
Interface	9-pin DSUB connector (Female)
Transfer method	RS485, Half-duplex
Transfer cable	Twisted pair (1 pair and shield)
Electrical isolation	500 Vdc
Serial protocols	Profibus DP
Baud rate	9.6 kBaud to 12 Mbaud
Power supply *Easergy P3 Standard:* *Easergy P3 Advanced:*	 External – 12Vdc From RS232 port or external – 12Vdc
To connect the interface with: Easergy **P3 Standard** devices, use **REL52827** cable Easergy **P3 Advanced** devices, use REL52824 cable	

Temperature and analog input/output modules

For Easergy P3

The temperature module is supplied ready for operation with:

- **Easergy P3U20, P3U30 with RS485 communication port direct**
- **Easergy P3U20, P3U30, and P3X3x with RS232 communication port by REL52820 external RS485 interface**
- **Easergy P3U20, P3U30, and P3X3x with RS232 communication port by REL52816 to REL52819 external fiber optic interface**

Function

The temperature modules can be used to connect temperature sensors from the field to the Easergy P3 devices using a communication port RS485 by twist-pair or fiber optic.

The temperature measurement is utilized by the following protection functions in transformer and motor application:

- Thermal overload
- Temperature monitoring
- Customized logic or custom protection function

The modules REL52813 and REL52814 have analog input and output to use in the special controls functions.

DM105626

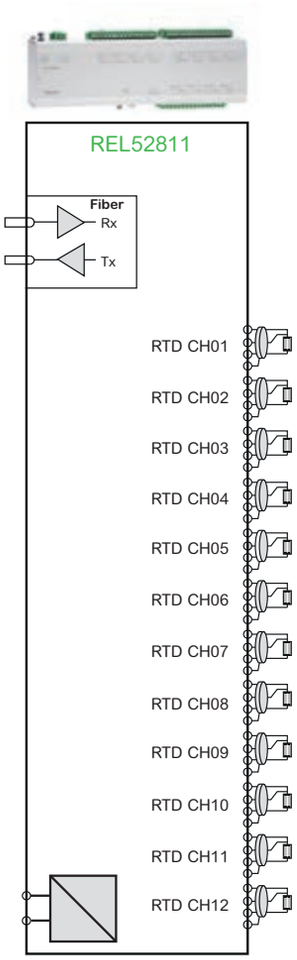

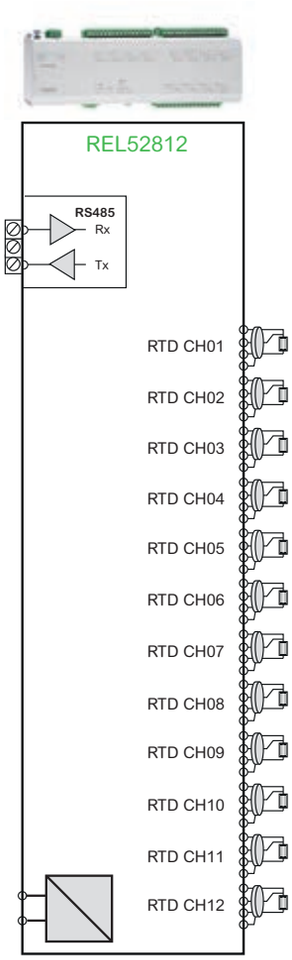

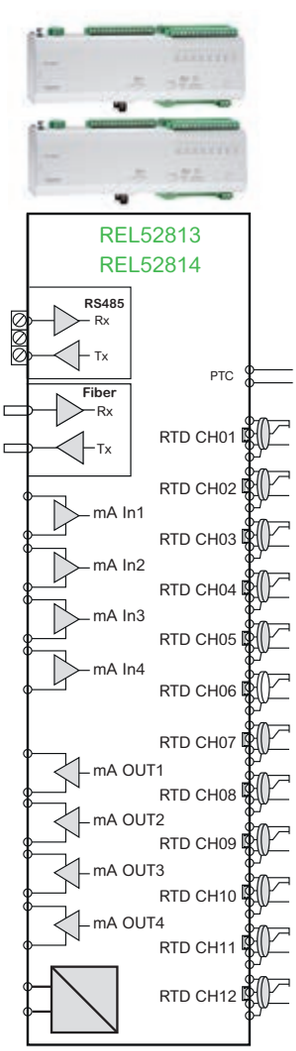

Temperature and analog input/output modules

Temperature input modules – REL52811 / REL52812 / REL52813 / REL52814				
Characteristics	**REL52811**	**REL52812**	**REL52813**	**REL52814**
Interface	Glass fiber (ST)	RS485 Twisted Pair	Glass fiber (ST) OR RS485,TP	
Distance (maximum)	2,000 m *(78,740 in)*	1,200 m* *(47,244 in)*	2 000 m / 1 200 m*	
Quantity of Temperature sensors	12 channels, 3-wire		12 channels, 3-wire and 1 PTC channel 2-wire	
Supported RTD types	Pt100, Ni00, Ni120 and Cu10			
Measuring range	1 - 400 Ω			
Measuring resolution	0.10 Ω			
Measuring accuracy	±0.3 Ω			
Sensor distance	50 Ω (corresponds to 2 000 m at 0.75 mm^2)			
Power Supply	24 - 230 Vac/dc 50/60 Hz		24 Vdc	48 - 230 Vac/dc 50/60 Hz
Operating Temperature	0°C *(32°F)* to 55°C *(131°F)*			
Mounting Type	DIN Rail			
Degree of protection	IP20			

* The value may decrease according to the conditions of use

Analog Input / Output modules – REL52811 / REL52812 / REL52813 / REL52814				
Characteristics	**REL52811**	**REL52812**	**REL52813**	**REL52814**
Analog Input (mA)	0	0	4	4
Input Range	-	-	0-25 mA	0-25 mA
Input accuracy	-	-	±1%	±1%
Input resolution	-	-	6uA (12-bits)	6uA (12-bits)
Input impedance	-	-	100 Ω	100 Ω
Analog Output (mA)	0	0	4	4
Output range	-	-	0-25 mA	0-25 mA
Output accuracy	-	-	±1%	±1%
Output resolution	-	-	6uA (12-bits)	6uA (12-bits)
Galvanic isolation	-	-	1000 V	1000 V
Max. Load/output	-	-	750 Ω	750 Ω
PTC Input	-	-	1	1
Measuring accuracy	-	-	±10% (<10 kΩ)	±10% (<10 kΩ)

* The value may decrease according to the conditions of use

Arc flash sensors

For Easergy P3 Advanced only

Sensors description

The sensor is used by an arc flash protection device (Easergy P3 Advanced) or system to detect the light coming from the arc flash incident.

The Easergy P3 Advanced arc sensor is activated by strong light. The sensor transforms the light information into the current signal, which is used by the protection device to indicate arc flash.

Arc flash sensors										
Characteristics	**REL52801**	**REL52802**	**REL52803**	**REL52804**	**REL52805**	**REL52806**	**REL52807**	**REL52808**	**REL52809**	**REL52810**
Material	Plastic									
Type	Standard						Pipe			
Weight	*1,000 g*	*1,300 g*	1,300 g	300 g	400 g	400 g	1,000 g	1,300 g	300 g	400 g
	2.20 lb	*2.87 lb*	2.87 lb	0.66 lb	0.88 lb	0.88 lb	2.20 lb	2.87 lb	0.66 lb	0.88 lb
Cable length (m)	6	20	20	6	6	6	20	20	6	6
Shielded cable	-	-	●	-	-	●	-	●	-	●
Halogen free	-	●	-	●	-	-	-	-	-	-
Environment	Pollution Degree 2									
Operation temperature	-25°C *(-13°F)* to +70°C *(+158°F)*									
Light spectrum sensitive area	400 – 1100 nm									
Detection time	1 ms									
Light sensitivity	8 000 – 10 000 lux									
Loop supervision	Yes									

To connect the interface in the Easergy P3 Standard devices, use REL52883 cable.

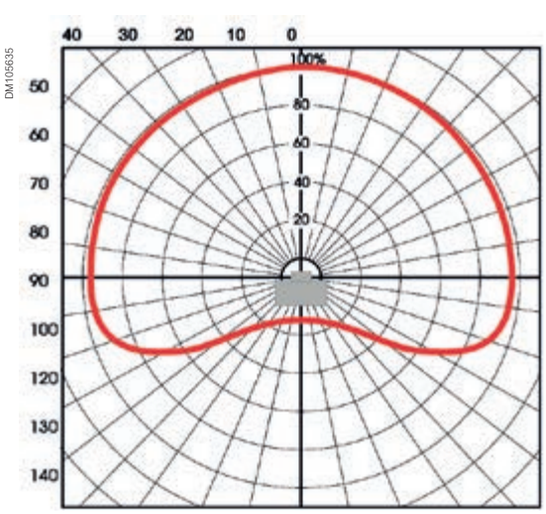

Sensitivity area

REL52801 - 52806 dimensions

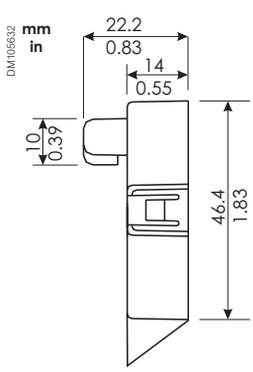

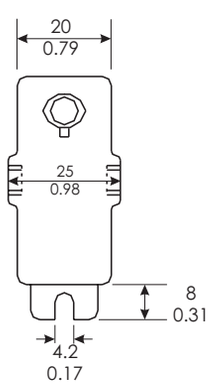

REL52807 - 52810 dimensions

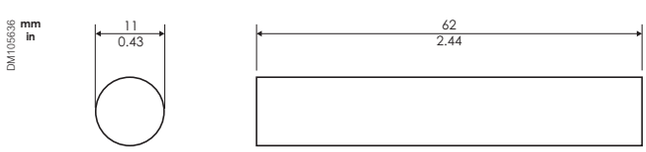

Arc Flash sensor: Pipe type

Arc flash sensors

For Easergy P3 Advanced only

Direct mounting on switchgear

Setting the light sensor in the switchgear requires either special supports type REL52828 (mounting plate for sensor Z-shape) or REL52829 (mounting plate for sensor L-shape), or it can be mounted in customer drilled holes.

PM106971

PM106972

Before

DM105633

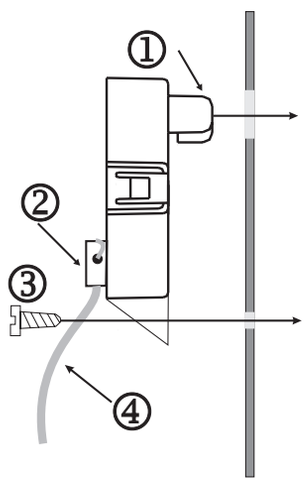

After

DM105634

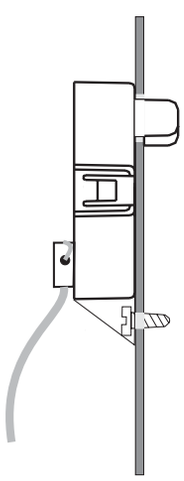

Mounting options

REL52829 dimensions

DM105637

mm
in

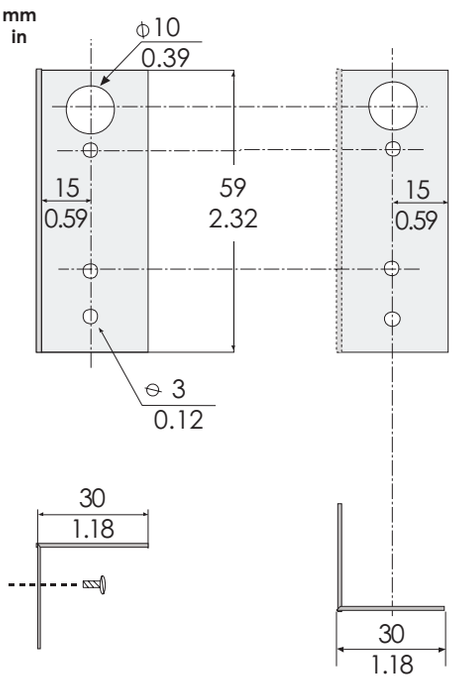

Mounting plate for sensor L-shape

REL52828 dimensions

DM105637

mm
in

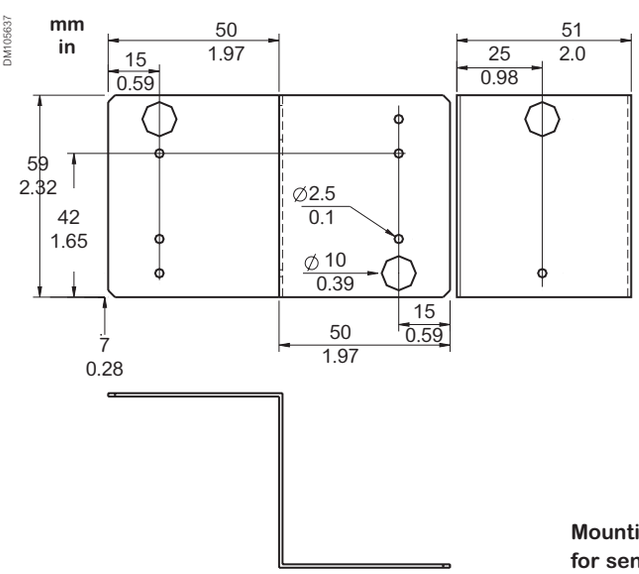

Mounting plate for sensor Z-shape

Schneider Electric Service

Schneider Electric Service

Greater peace of mind throughout your installation lifecycle	100
On-site condition maintenance with ProDiag MV Relay	101
Achieve higher sustainability with ECOFIT™ solutions	102
Environmental information with Green PremiumTM ecolabel	103

Greater peace of mind throughout your installation lifecycle

How can you cut costs and improve performance at the same time?

When it comes to your electrical distribution infrastructure, the answer is straightforward: get professional expertise.

Life cycle services

DM408843

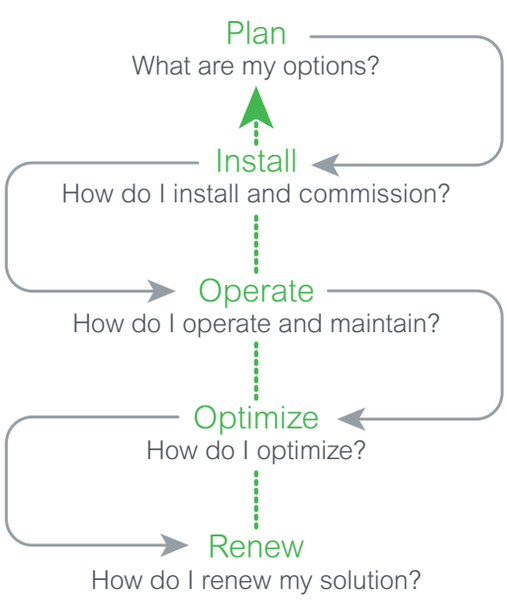

When it comes to your electrical distribution installation, we can help you:

- Increase productivity, reliability and safety
- Mitigate risk and limit downtime
- Keep equipment up to date and extend lifespan
- Cut cost and increase savings
- Improve your return on investment

CONTACT US!

https://www.schneider-electric.co.in/en/work/services/

Plan

Schneider Electric helps you plan the full design and execution of your solution, looking at how to make your process more dependable and optimize time:

- **Technical feasibility studies:** Design solution in your environment
- **Preliminary design:** Accelerate turnaround time to reach a final solution design.

Install

Schneider Electric will help you to install more efficient, more reliable and safer solutions based on your plans.

- **Project management:** Complete your projects on time and within budget
- **Commissioning:** Ensure your actual performance versus design, through on-site testing and commissioning, and tools and procedures.

Operate

Schneider Electric helps you maximize your installation uptime and control your capital expenditures through its services offering.

- **Asset operation solutions:** Provide the information you need to increase safety, enhance installation performance, and optimize asset maintenance and investment
- **Advantage service plans:** Customize service plans that include preventive, predictive and corrective maintenance
- **On-site maintenance services:** Deliver extensive knowledge and experience in electrical distribution maintenance
- **Spare parts management:** Ensures spare parts availability and optimized maintenance budget of your spare parts
- **Technical training:** Builds necessary skills and competencies to properly and safety operate your installations.

Optimize

Schneider Electric proposes recommendations for improved safety, availability, reliability and quality.

- **MP4 electrical assessment:** Define an improvement and risk management program.

Renew

Schneider Electric's end-of-life solutions may extend the life of your system while providing upgrades. Under specific service agreements, our service team can take full responsibility for the end-of-life processing of old electrical equipment:

- **Retrofit:** Keep up to date and improve the performance of electrical installations
- **MV product end-of-life:** Recycle and recover outdated equipment with end-of-life services.

On-site condition maintenance with ProDiag MV Relay

DM107178

Why carry out diagnostics?

Business competitiveness depends strongly on productivity, and productivity means uptime. On-site condition maintenance, with regular diagnostics, provides a long-term solution to avoid downtime.

Why perform Easergy relay diagnostics with Schneider Electric?

Schneider Electric offers a complete range of maintenance services to provide you with the necessary level of maintenance for your Easergy devices. Having Schneider Electric at your side means our highly qualified personal can perform the right maintenance, while complying with manufacturer procedures and international services.

Diagnosing protection relay tripping capability

The ProDiag MV Relay diagnostic solution should be used on MV protection relays that have not received any diagnostics within the last four years.

This diagnostic checks the protection relay's conformity against the original product specifications. This is done to highlight any problem (internal or external) to the goal of the protection scheme:

- Reducing risks by isolating hazardous segments of the network where an electrical fault has been detected
- Maintaining high energy availability to avoid a total power outage and costly downtime
- Maximizing uptime by performing in-depth analysis and de-energizing equipment only when absolutely necessary

ProDiag MV Relay's unique features:

- Automatic download of all protection relay settings through drivers in the ProDiag MV Relay manager
- Easy verification of modifications made to protection settings since the last visit
- Easy verification of MV Relay original technical specifications

EM100201

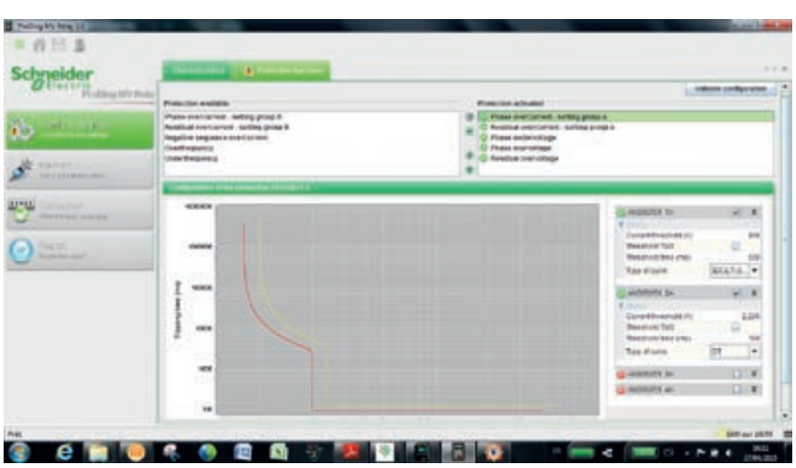

ProDiag MV Relay: Included in the extended 10-year warranty*

The Easergy P3 extended 10-year warranty applies under the following conditions:

- The product is registered within 18 months. Simply use the "My Schneider" app to scan the QR code found on the front of your Easergy P3
- The ProDiag MV Relay diagnostic is performed every FOUR YEARS (when Easergy P3 is used under normal operating conditions)
- Any replaced or repaired products have the latest hardware and firmware versions, and are functionally compliant with the original product

Easergy 10 years Warranty

* Standard warranty 2 years.
Please check with your local Schneider Electric representative for extended warranty availability and conditions.

Achieve higher sustainability with ECOFIT™ solutions

Modernizing and upgrading your medium voltage switchgear doesn't need to mean your existing infrastructure is destructed.

Schneider Electric retrofit solutions, combined with proper switchgear maintenance helps you to improve the reliability of your installation while achieving higher sustainable performance with ECOFIT™ - a Green Premium™ service.

ECOFIT™ for your MV Switchboard

- Extend your switchgears lifetime
- Access asset and energy management with digitization
- Reduce your environmental impact
- Enhance your process dependability
- Optimize your maintenance service costs and limit your investment
- New ECOFIT™ spare parts availability.

A true extended life time with ECOFIT™

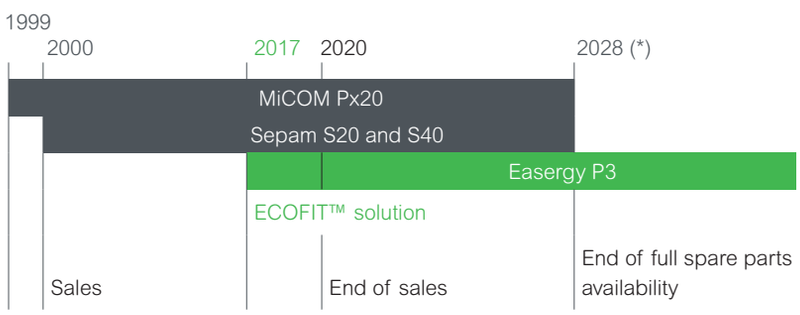

(*) Please consult Schneider electric

ECOFIT™ offers:

	Sepam S20	Sepam S40	MiCOM Px20	Easergy P3
Case	Flush mounting	Flush mounting	Flush mounting	Flush mounting
Installation	Fix	Fix	Withdrawable case	All terminals pluggable in Easergy P3 Standard DI, DO and V terminals pluggable in Easergy P3 Advanced
Language	Multilanguage	Multilanguage	Multilanguage	Multilanguage
Communication	IEC 60870-5-103 DNP3 Modbus serial	IEC 61850 Station bus IEC 60870-5-103 DNP3 Modbus serial Modbus Ethernet	Modbus serial Kbus Courier IEC60870-5-103 DNP3	IEC 61850 Ed.1 & Ed.2 IEC 60870-5-103 & 101 IEC 60870-5-101 Ethernet DNP3 Ethernet and Serial Modbus Ethernet and Serial EtherNet/IP SPA, Profibus
Power supply	24 - 250 Vdc 48 - 240 Vac	24 - 250 Vdc 48 - 240 Vac	24 - 250 Vdc 48 - 240 Vac	24 - 57 Vdc 80 - 265 Vdc/ac
Control LED	11 LEDs	11 LEDs	8 LEDs	P3 Standard: 12 LEDs P3 Advanced: 18 LEDs
Cyber security	No	No	No	Numerical password, 32 digits
Arc-flash	No	No	No	P3 Advanced: 1, 2, 4, 5 or 6 sensors
Back up memory	No	No	No	No
Compatibility with	P3 Standard: S20 / S24 / T20 / T24 / B21 / B22 / M20	P3 Standard / Advanced: S40 / S41 / S42 / S43 / S44 / T40 / T42 / M40 / M41 / G40	P3 Standard: P120 / P121 / P122 /P123 / P921 / P922 / P923 / P721 / P723 / P920 P3 Standard / Advanced: P126 / P127 / P225 / P521 / P220 / P125	

Environmental information with Green Premium™ ecolabel

An industry leading portfolio of offers delivering sustainable value

More than 75% of our product sales offer superior transparency on the material content, regulatory information and environmental impact of our products:

- RoHS compliance
- REACh substance information
- Industry leading # of PEP's*
- Circularity instructions

Discover what we mean by green
Check your products!

The Green Premium program stands for our commitment to deliver customer valued sustainable performance. It has been upgraded with recognized environmental claims and extended to cover all offers including Products, Services and Solutions.

CO_2 and P&L impact through… Resource Performance

Green Premium brings improved resource efficiency throughout an asset's lifecycle. This includes efficient use of energy and natural resources, along with the minimization of CO_2 emissions.

Cost of ownership optimization through… Circular Performance

We're helping our customers optimize the total cost of ownership of their assets. To do this, we provide IoT-enabled solutions, as well as upgrade, repair, retrofit, and remanufacture services.

Peace of mind through… Well-being Performance

Green Premium products are RoHS and REACh compliant. We're going beyond regulatory compliance with step-by-step substitution of certain materials and substances from our products.

Improved sales through… Differentiation

Green Premium delivers strong value propositions through third-party labels and services. By collaborating with third-party organizations we can support our customers in meeting their sustainability goals such as green building certifications.

*PEP: Product Environmental Profile (i.e. Environmental Product Declaration)

Ordering

Ordering

Fast Ordering Code	106
Easergy P3 Standard	109
Easergy P3U10 configuration	110
Easergy P3U20 configuration	110
Easergy P3U30 configuration	111
Easergy P3 Advanced	112
Easergy P3F30 configuration	112
Easergy P3L30 configuration	113
Easergy P3M30 configuration	114
Easergy P3M32 configuration	115
Easergy P3T32 configuration	116
Easergy P3G30 configuration	117
Easergy P3G32 configuration	118
Accessories	119
Tools	120

Fast ordering code

Easergy P3 Standard

Easergy P3 Standard

Commercial Ref.	Product Reference	Nominal Power Supply	Nominal Digital Input Voltage	Voltage Input	Nbr. Digital Input/Output	Option	Com. Port
REL52001	P3U30-5AAA3BCAA	Power A 48-230 V	220-230 Vac/dc	4	16 DI / 8 DO	Screw connector	2 x RJ45
REL52002	P3U30-5AAA3BBAA	Power A 48-230 V	220-230 Vac/dc	4	16 DI / 8 DO	Screw connector	RS485
REL52003	P3U30-5AAA1BCAA	Power A 48-230 V	24-230 Vac/dc	4	16 DI / 8 DO	Screw connector	2 x RJ45
REL52004	P3U30-5AAA2BCAA	Power A 48-230 V	110-230 Vac/dc	4	16 DI / 8 DO	Screw connector	2 x RJ45
REL52005	P3U30-5AAA1BBAA	Power A 48-230 V	24-230 Vac/dc	4	16 DI / 8 DO	Screw connector	RS485
REL52006	P3U30-5ABA1BBAA	Power B 24 V	24-230 Vac/dc	4	16 DI / 8 DO	Screw connector	RS485
REL52007	P3U30-5AAA1BDAA	Power A 48-230 V	24-230 Vac/dc	4	16 DI / 8 DO	Screw connector	2 x LC
REL52008	P3U30-6AAA2BCAA	Power A 48-230 V	110-230 Vac/dc	4	16 DI / 8 DO	Ring-lug connector	2 x RJ45
REL52009	P3U30-5ABA1BCAA	Power B 24 V	24-230 Vac/dc	4	16 DI / 8 DO	Screw connector	2 x RJ45
REL52010	P3U30-5AAA2BDAA	Power A 48-230 V	110-230 Vac/dc	4	16 DI / 8 DO	Screw connector	2 x LC
REL52011	P3U20-5ABA1ACAA	Power B 24 V	24-230 Vac/dc	1	10 DI / 5 DO	Screw connector	2 x RJ45
REL52012	P3U30-5AAA2BBAA	Power A 48-230 V	110-230 Vac/dc	4	16 DI / 8 DO	Screw connector	RS485
REL52013	P3U20-5AAA1ACAA	Power A 48-230 V	24-230 Vac/dc	1	10 DI / 5 DO	Screw connector	2 x RJ45
REL52014	P3U30-5ABA1BDAA	Power B 24 V	24-230 Vac/dc	4	16 DI / 8 DO	Screw connector	2 x LC
REL52015	P3U20-6AAA2ACAA	Power A 48-230 V	110-230 Vac/dc	1	10 DI / 5 DO	Ring-lug connector	2 x RJ45
REL52016	P3U30-6AAA2BBAA	Power A 48-230 V	110-230 Vac/dc	4	16 DI / 8 DO	Ring-lug connector	RS485
REL52017	P3U30-6AAA3BCAA	Power A 48-230 V	220-230 Vac/dc	4	16 DI / 8 DO	Ring-lug connector	2 x RJ45
REL52018	P3U20-5AAA2ACAA	Power A 48-230 V	110-230 Vac/dc	1	10 DI / 5 DO	Screw connector	2 x RJ45
REL52019	P3U30-5AAA1BFAA	Power A 48-230 V	24-230 Vac/dc	4	16 DI / 8 DO	Screw connector	LC + RS232
REL52020	P3U30-6ABA1BBAA	Power B 24 V	24-230 Vac/dc	4	16 DI / 8 DO	Ring-lug connector	RS485
REL52021	P3U30-6AAA2BDAA	Power A 48-230 V	110-230 Vac/dc	4	16 DI / 8 DO	Ring-lug connector	2 x LC
REL52022	P3U30-6AAA1BCAA	Power A 48-230 V	24-230 Vac/dc	4	16 DI / 8 DO	Ring-lug connector	2 x RJ45
REL52023	P3U20-6ABA1ADAA	Power B 24 V	24-230 Vac/dc	1	10 DI / 5 DO	Ring-lug connector	2 x LC
REL52024	P3U20-5ABA1ADAA	Power B 24 V	24-230 Vac/dc	1	10 DI / 5 DO	Screw connector	2 x LC
REL52025	P3U30-5BAA2BCAA	Power A 48-230 V	110-230 Vac/dc	4	16 DI / 8 DO	Screw connector	2 x RJ45
REL52026	P3U10-5AAA1AAAA	Power A 48-230 V	24-230 Vac/dc	1	2 DI / 5 DO	Screw connector	none
REL52027	P3U10-6AAA1AAAA	Power A 48-230 V	24-230 Vac/dc	1	2 DI / 5 DO	Ring-lug connector	none
REL52028	P3U10-5AAA2AAAA	Power A 48-230 V	110-230 Vac/dc	1	2 DI / 5 DO	Screw connector	none
REL52029	P3U10-6AAA2AAAA	Power A 48-230 V	110-230 Vac/dc	1	2 DI / 5 DO	Ring-lug connector	none
REL52030	P3U10-5AAA3AAAA	Power A 48-230 V	220-230 Vac/dc	1	2 DI / 5 DO	Screw connector	none
REL52031	P3U10-6AAA3AAAA	Power A 48-230 V	220-230 Vac/dc	1	2 DI / 5 DO	Ring-lug connector	none
REL52032	P3U20-5AAA1ABAA	Power A 48-230 V	24-230 Vac/dc	1	10 DI / 5 DO	Screw connector	RS485
REL52033	P3U20-5AAA1ADAA	Power A 48-230 V	24-230 Vac/dc	1	10 DI / 5 DO	Screw connector	2 x LC

Fast ordering code

Easergy P3 Standard

Easergy P3 Standard

Commercial Ref.	Product Reference	Nominal Power Supply	Nominal Digital Input Voltage	Voltage Input	Nbr. Digital Input/Output	Option	Com. Port
REL52034	P3U20-6AAA1ABAA	Power A 48-230 V	24-230 Vac/dc	1	10 DI / 5 DO	Ring-lug connector	RS485
REL52035	P3U20-6AAA1ACAA	Power A 48-230 V	24-230 Vac/dc	1	10 DI / 5 DO	Ring-lug connector	2 x RJ45
REL52036	P3U20-6AAA1ADAA	Power A 48-230 V	24-230 Vac/dc	1	10 DI / 5 DO	Ring-lug connector	2 x LC
REL52037	P3U20-5AAA2ABAA	Power A 48-230 V	110-230 Vac/dc	1	10 DI / 5 DO	Screw connector	RS485
REL52038	P3U20-5AAA2ADAA	Power A 48-230 V	110-230 Vac/dc	1	10 DI / 5 DO	Screw connector	2 x LC
REL52039	P3U20-6AAA2ABAA	Power A 48-230 V	110-230 Vac/dc	1	10 DI / 5 DO	Ring-lug connector	RS485
REL52040	P3U20-6AAA2ADAA	Power A 48-230 V	110-230 Vac/dc	1	10 DI / 5 DO	Ring-lug connector	2 x LC
REL52041	P3U20-5AAA3ABAA	Power A 48-230 V	220-230 Vac/dc	1	10 DI / 5 DO	Screw connector	RS485
REL52042	P3U20-5AAA3ACAA	Power A 48-230 V	220-230 Vac/dc	1	10 DI / 5 DO	Screw connector	2 x RJ45
REL52043	P3U20-5AAA3ADAA	Power A 48-230 V	220-230 Vac/dc	1	10 DI / 5 DO	Screw connector	2 x LC
REL52044	P3U20-6AAA3ABAA	Power A 48-230 V	220-230 Vac/dc	1	10 DI / 5 DO	Ring-lug connector	RS485
REL52045	P3U20-6AAA3ACAA	Power A 48-230 V	220-230 Vac/dc	1	10 DI / 5 DO	Ring-lug connector	2 x RJ45
REL52046	P3U20-6AAA3ADAA	Power A 48-230 V	220-230 Vac/dc	1	10 DI / 5 DO	Ring-lug connector	2 x LC
REL52047	P3U30-6AAA1BBAA	Power A 48-230 V	24-230 Vac/dc	4	16 DI / 8 DO	Ring-lug connector	RS485
REL52048	P3U30-6AAA1BDAA	Power A 48-230 V	24-230 Vac/dc	4	16 DI / 8 DO	Ring-lug connector	2 x LC
REL52049	P3U30-5AAA3BDAA	Power A 48-230 V	220-230 Vac/dc	4	16 DI / 8 DO	Screw connector	2 x LC
REL52050	P3U30-6AAA3BBAA	Power A 48-230 V	220-230 Vac/dc	4	16 DI / 8 DO	Ring-lug connector	RS485
REL52051	P3U30-6AAA3BDAA	Power A 48-230 V	220-230 Vac/dc	4	16 DI / 8 DO	Ring-lug connector	2 x LC

For more configuration or options,
please use our web configurator or see:

page 109 for Easergy P3U10
page 110 for Easergy P3U20
page 111 for Easergy P3U30

Go to web configurator

Fast ordering code

Easergy P3 Advanced

Easergy P3 Advanced

Commercial Ref.	Product Reference	Nominal Power Supply	Nominal Digital Input Voltage	Voltage Input	Nbr. Digital Input/Output	Option	Com. Port
REL52101	P3F30-CGGGG-AAENA-BAAAA	Power C 110-230 V	24-230 Vac/dc	4	24 DI / 21 DO	-	2 x RJ45
REL52102	P3F30-CGGGI-AAENA-BBAAA	Power C 110-230 V	110-230 Vac/dc	4	28 DI / 17 DO	-	2 x RJ45
REL52103	P3F30-CGGGI-DAECA-BBAAA	Power C 110-230 V	110-230 Vac/dc	4	28 DI / 17 DO	4 Arc sensors	RS232 + RJ45
REL52104	P3F30-CGGIA-AAEBA-BCAAA	Power C 110-230 V	220-230 Vac/dc	4	22 DI / 13 DO	-	RS232
REL52105	P3F30-CGGIA-AAECA-BAAAA	Power C 110-230 V	24-230 Vac/dc	4	22 DI / 13 DO	-	RS232 + RJ45
REL52106	P3F30-CGGIA-AAENA-BAAAA	Power C 110-230 V	24-230 Vac/dc	4	22 DI / 13 DO	-	2 x RJ45
REL52107	P3F30-CGGIA-AAEOA-BBAAA	Power C 110-230 V	110-230 Vac/dc	4	22 DI / 13 DO	-	2 x LC
REL52108	P3F30-CGGIA-DAENA-BAAAA	Power C 110-230 V	24-230 Vac/dc	4	22 DI / 13 DO	4 Arc sensors	2 x RJ45
REL52109	P3F30-CGIAA-AAECA-BAAAA	Power C 110-230 V	24-230 Vac/dc	4	16 DI / 9 DO	4 Arc sensors	RS232 + RJ45
REL52110	P3F30-CGIAA-AAEDA-BBAAA	Power C 110-230 V	110-230 Vac/dc	4	16 DI / 9 DO	4 Arc sensors	RS232 + LC
REL52111	P3F30-CGIAA-DAENA-BAAAA	Power C 110-230 V	24-230 Vac/dc	4	16 DI / 9 DO	4 Arc sensors	2 x RJ45
REL52112	P3F30-CGIIA-AAENA-BAAAA	Power C 110-230 V	24-230 Vac/dc	4	26 DI / 9 DO	-	2 x RJ45
REL52113	P3F30-DGGGG-AAENA-BAAAA	Power D 24-48 V	24-230 Vac/dc	4	24 DI / 21 DO	-	2 x RJ45
REL52114	P3F30-DGGGI-AAENA-BAAAA	Power D 24-48 V	24-230 Vac/dc	4	28 DI / 17 DO	-	2 x RJ45
REL52115	P3F30-DGGIA-AAECA-BAAAA	Power D 24-48 V	24-230 Vac/dc	4	22 DI / 13 DO	-	RS232 + RJ45
REL52116	P3F30-DGGIA-AAENA-BAAAA	Power D 24-48 V	24-230 Vac/dc	4	22 DI / 13 DO	-	2 x RJ45
REL52117	P3F30-DGGIA-DAENA-BAAAA	Power D 24-48 V	24-230 Vac/dc	4	22 DI / 13 DO	4 Arc sensors	2 x RJ45
REL52118	P3F30-DGIAA-AAENA-BAAAA	Power D 24-48 V	24-230 Vac/dc	4	16 DI / 9 DO	-	2 x RJ45
REL52119	P3F30-DGIAA-DAENA-BAAAA	Power D 24-48 V	24-230 Vac/dc	4	16 DI / 9 DO	4 Arc sensors	2 x RJ45
REL52120	P3F30-DGIIA-AAENA-BAAAA	Power D 24-48 V	24-230 Vac/dc	4	26 DI / 9 DO	-	2 x RJ45

For more configuration or options, please use our web configurator or see:

page 112 for Easergy P3F30

page 113 for Easergy P3L30

page 114 for Easergy P3M30

page 115 for Easergy P3M32

page 116 for Easergy P3T32

page 117 for Easergy P3G30

page 118 for Easergy P3G32

Go to web configurator

Go to web configurator

Easergy P3 Standard

Easergy P3U10 configuration

	U10	**Application**
	U10	Feeder & Motor, 4xI, 1xU. 2DI, 5DO
X1		**Phase currents & voltage input, X1**
	5	1 A / 5 A & 1U (100/110 V), pluggable clamp connector
	6	1 A / 5 A & 1U (100/110 V), pluggable ring lug connector
X1		**Earth-fault current input, X1**
	A	1 A / 5 A
	B	0,2 A / 1 A
X2		**Nominal power supply voltage [V], X2**
	A	Power A 48 - 230 V (range: 40 ... 265 Vac/dc)
	B	Power B 24 - 57V (range: 18 ... 60 Vdc) (1
	A	**Future option**
	A	None
		Nominal Digital Input voltage (voltage withstand)
	1	24 Vac/dc (255 Vac/dc)
	2	110 Vac/dc (255 Vac/dc)
	3	220 Vac/dc (255 Vac/dc)
X5	A	**Voltage measurements + I/O, X5**
	A	None
X4	A	**I/O with comms, X4**
	A	None
		Product version
	A	Version 2.1, newest FW
	B	FW30.108
		Region
	A	English, IEC
	B	English, ANSI
	C	Chinese
	R	Russian
	M	Malaysia

(1 Always check the power supply range from the relay's serial number sticker

1. Choose your option
2. Mark your choice in the box below
3. Check your **order code:**

Easergy P3	**U10**				**A**		**A**	**A**		
Slot numbers		**X1**	**X1**	**X2**			**X5**	**X4**		

Easergy P3 Standard

Easergy P3U20 configuration

	U20	**Application**	
		U20	Feeder & Motor, 4xI, 1xU. 2DI, 5DO
X1		**Phase currents & voltage input, X1**	
		5	1 A/ 5 A & 1U (100/110 V), pluggable clamp connector
		6	1 A / 5 A & 1U (100/110 V), pluggable ring lug connector
X1		**Earth-fault current input, X1**	
		A	1 A / 5 A
		B	0,2 A / 1 A
X2		**Nominal Supply Voltage [V], X2**	
		A	Power A 48 - 230 V (range: 40 ... 265 Vac/dc)
		B	Power B 24 - 57 V (range: 18 ... 60 Vdc) (1
	A	**Future option**	
		A	None
		Nominal Digital Input voltage (voltage withstand)	
		1	24 Vac/dc (255 Vac/dc)
		2	110 Vac/dc (255 Vac/dc)
		3	220 Vac/dc (255 Vac/dc)
		4	24 Vac/dc for DI -DI2, 110 Vac/dc for DI3-DI16 (255 Vac/dc)
		5	24 Vac/dc for DI -DI2, 220 Vac/dc for DI3-DI16 (255 Vac/dc)
X5	A	**Voltage measurements + I/O, X5**	
		A	None
X4		**I/O with comms, X4**	
		B	RS-485 + 8DI
		C	2 x RJ-45 + 8DI
		D	2 x LC + 8DI
		E	RJ + 232 + 8DI with IRIG-B
		F	LC + 232 + 8DI with IRIG-B
		G	RS-485 + 6DI + 3DO
		H	2 x RJ-45 + 6DI + 3DO
		I	2 x LC + 6DI + 3DO
		Product version	
		A	Version 2.1, newest FW
		B	FW30.108
		Region	
		A	English, IEC
		B	English, ANSI
		C	Chinese
		R	Russian
		M	Malaysia

1) Always check the power supply range from the relay's serial number sticker

1. Choose your option
2. Mark your choice in the box below
3. Check your **order code:**:

Easergy P3	U20				A		A			
Slot numbers		X1	X1	X2			X5	X4		

Easergy P3 Standard

Easergy P3U30 configuration

	U30	**Application**
	U30	Feeder & Motor, 4xI, 4xU. 2DI, 5DO
X1		**Phase currents & voltage input, X1**
	5	1 A/ 5 A & 1U (100/110 V), pluggable clamp connector
	6	1 A / 5 A & 1U (100/110 V), pluggable ring lug connector
	7	3 LPCT + 5 LPVT (1
X1		**Earth-fault current input, X1**
	A	1 A / 5 A
	B	0,2 A / 1 A
X2		**Nominal Supply Voltage [V], X2**
	A	Power A 48 - 230 V (range: 40 ... 265 Vac/dc)
	B	Power B 24 - 48 V (range: 18 ... 57 Vdc) (2
	A	**Future option**
	A	None
		Nominal Digital Input voltage (voltage withstand)
	1	24 Vac/dc (255 Vac/dc)
	2	110 Vac/dc (255 Vac/dc)
	3	220 Vac/dc (255 Vac/dc)
	4	24 Vac/dc for DI -DI2, 110 Vac/dc for DI3-DI16 (255 Vac/dc)
	5	24 Vac/dc for DI1-DI2, 220 Vac/dc for DI3-DI16 (255 Vac/dc)
X5		**Voltage measurements + I/O, X5**
	B	3U (100 / 110 V) + 6DI + 3DO
	C	6 DI + 3 DO
X4		**I/O with comms, X4**
	B	RS-485 + 8DI
	C	2 x RJ-45 + 8DI
	D	2 x LC + 8DI
	E	RJ + 232 + 8DI with IRIG-B
	F	LC + 232 + 8DI with IRIG-B
		Product version
	A	Version 2.1
	B	FW30.108
		Region
	A	English, IEC
	B	English, ANSI
	C	Chinese
	R	Russian
	M	Malaysia

(1 Contact us for availability

(2 Always check the power supply range from the relay's serial number sticker

1. Choose your option
2. Mark your choice in the box below
3. Check your **order code:**

Easergy P3	U30				A					
Slot numbers		X1	X1	X2			X5	X4		

Easergy P3 Advanced

Easergy P3F30 configuration

	F30	**Application**
		F30 Feeder protection relay
1		**Nominal Supply Voltage [V]**
		C Power C 110 - 230 V (80 .. 265 Vac/dc, 5 x DO heavy duty, A1, SF)
		D Power D 24 - 48 V (18 .. 60 Vdc, 5 x DO heavy duty, A1, SF)
2		**I/O Card I**
		G 6DI+4DO (6 x DI, 4 x DO)
		B 3BIO+2Arc (3 x BI/BO, 2 x Arc point sensor, T2, T3, T4)
		C F2BIO+1Arc (Fibre 2 x BI/BO, 1 x Arc loop sensor, T2, T3, T4)
3		**I/O Card II** (1
		A None
		G 6DI+4DO (6 x DI, 4 x DO)
		H 6DI+4DO (6 x DI, 4 x DO(NC))
		I 10DI (10 x DI)
4		**I/O Card III** (1 (2
		A None
		G 6DI+4DO (6 x DI, 4 x DO)
		H 6DI+4DO (6 x DI, 4 x DO(NC))
		I 10DI (10 x DI)
5		**I/O Card IV** (2
		A None
		D 2IGBT (2 x IGBT High speed outputs), excludes I/O Card III, slot 4
		G 6DI+4DO (6 x DI, 4 x DO)
		H 6DI+4DO (6 x DI, 4 x DO(NC))
		I 10DI (10 x DI)
6		**Option card I**
		A None
		D 4Arc (4 x Arc sensor)
		K RS232 (RS232)
7	A	**Future option**
		A None
8		**Analog measurement card (See application)**
		E 3L(5/1A) + 2Io(5/1A+1/0,2A) + 4U
		F 3L(1A) + 2Io(5/1A+1/0.2A) + 4U
		M 3LPCT + 2Io(5/1A+1/0,2A) + 5LPVT (3
		1 3L(5/1A) + 2Io (5/1A+1/0,2A) ringlug + 4U
		2 3L(1A) + 2Io (5/1A+1/0.2A) ringlug + 4U
9		**Communication interface I**
		A None
		B RS232 (RS232, IRIG-B)
		C RS232+RJ (RS232, IRIG-B + Ethernet RJ-45 100 Mbs)
		D RS232+LC (RS232, IRIG-B + Ethernet LC 100 Mbs)
		E 2xRS485 (2-wire)
		F RS485+RJ (RS485 2-wire + Ethernet RJ-45 100Mbs)
		G RS485+LC (RS485 2-wire + Ethernet LC 100Mbs)
		N 2xRJ (Ethernet RJ 100 Mbs, RSTP, PRP)
		O 2xLC (Ethernet LC 100 Mbs, RSTP, PRP)
		P PP (Plastic / Plastic serial fibre)
		R GG (Glass / Glass serial fibre)
10	A	**Reserved**
		A Reserved
		Display type
		B 128x128 (128 x 128 LCD matrix)
		C 128x128Ext (128 x 128 LCD matrix, detachable) (4
		Nominal Digital Input voltage (voltage withstand)
		A 24 Vdc/ac, (255 Vac/dc)
		B 110 Vdc/ac, (255 Vac/dc)
		C 220 Vdc/ac, (255 Vac/dc)
	A	**Product version**
		A Version 2.1
	A	**Future option**
		A None
		Region
		A English, IEC
		B English, ANSI
		C Chinese
		R Russia

(1 If Slot 3 = A then Slot 4=A
If Slot 3 = I then Slot 4=A or I

(2 If Slot 5 = D then Slot 4=A
If Slot 4 = A then Slot 5=A
If Slot 4 = I then Slot 5=A or I

(3 Contact us for availability

(4 By default cable length is 2 m. In case other legth is needed order separately VX001-1, Vx001-3 or VX001-5 for 1 m, 3 m and 5 m respectively.

1. Choose your option
2. Mark your choice in the box below
3. Check your **order code:**

Easergy P3	**F30**						-		**A**			**A**	-			**A**	**A**	
Slot numbers		**1**	**2**	**3**	**4**	**5**	-	**6**	**7**	**8**	**9**	**10**						

Easergy P3 Advanced

Easergy P3L30 configuration

	L30	**Application**
		L30 Feeder protection relay with Line differential and distance protection
1		**Nominal Supply Voltage [V]**
		C Power C 110 - 230 V (80 .. 265 Vac/dc, 5 x DO heavy duty, A1, SF)
		D Power D 24 - 48 V (18 .. 60 Vdc, 5 x DO heavy duty, A1, SF)
2		**I/O Card I**
		G 6DI+4DO (6 x DI, 4 x DO)
		B 3BIO+2Arc (3 x BI/BO, 2 x Arc point sensor, T2, T3, T4)
		C F2BIO+1Arc (Fibre 2 x BI/BO, 1 x Arc loop sensor, T2, T3, T4)
3		**I/O Card II** (1
		A None
		G 6DI+4DO (6 x DI, 4 x DO)
		H 6DI+4DO (6 x DI, 4 x DO(NC))
		I 10DI (10 x DI)
4		**I/O Card III** (1 (2
		A None
		G 6DI+4DO (6 x DI, 4 x DO)
		H 6DI+4DO (6 x DI, 4 x DO(NC))
		I 10DI (10 x DI)
5		**I/O Card IV** (2
		A None
		D 2IGBT (2 x IGBT High speed outputs), excludes I/O Card III, slot 4
		G 6DI+4DO (6 x DI, 4 x DO)
		H 6DI+4DO (6 x DI, 4 x DO(NC))
		I 10DI (10 x DI)
6		**Option card I**
		A None, Distance protection included
		S Line diff and distance FW with integrated optical diff comms. card
		T Line diff and distance FW with RS232 for external diff comms. converter
7	A	**Future option**
		A None
8		**Analog measurement card (See application)**
		E 3L(5/1A) + 2Io(5/1A+1/0,2A) + 4U
		F 3L(1A) + 2Io(5/1A+1/0.2A) + 4U
		M 3LPCT + 2Io(5/1A+1/0,2A) + 5LPVT (3
		1 3L(5/1A) + 2Io (5/1A+1/0,2A) ringlug + 4U
		2 3L(1A) + 2Io (5/1A+1/0.2A) ringlug + 4U
9		**Communication interface I**
		A None
		B RS232 (RS232, IRIG-B)
		C RS232+RJ (RS232, IRIG-B + Ethernet RJ-45 100 Mbs)
		D RS232+LC (RS232, IRIG-B + Ethernet LC 100 Mbs)
		E 2xRS485 (2-wire)
		F RS485+RJ (RS485 2-wire + Ethernet RJ-45 100Mbs)
		G RS485+LC (RS485 2-wire + Ethernet LC 100Mbs)
		N 2xRJ (Ethernet RJ 100 Mbs, RSTP)
		O 2xLC (Ethernet LC 100 Mbs, RSTP)
		P PP (Plastic / Plastic serial fibre)
		R GG (Glass / Glass serial fibre)
10	A	**Reserved**
		A Reserved
		Display type
		B 128x128 (128 x 128 LCD matrix)
		C 128x128Ext (128 x 128 LCD matrix, detachable) (4
		Nominal Digital Input voltage (voltage withstand)
		A 24 Vdc/ac, (255 Vac/dc)
		B 110 Vdc/ac, (255 Vac/dc)
		C 220 Vdc/ac, (255 Vac/dc)
	A	**Product version**
		A Version 2.1
	A	**Future option**
		A None
		Region
		A English, IEC
		B English, ANSI
		C Chinese
		R Russia

(1 If Slot 3 = A then Slot 4=A
If Slot 3 = I then Slot 4=A or I

(2 If Slot 5 = D then Slot 4=A
If Slot 4 = A then Slot 5=A
If Slot 4 = I then Slot 5=A or I

(3 Contact us for availability

(4 By default cable length is 2 m. In case other length is needed order separately VX001-1, VX001-3 or VX001-5 for 1 m, 3 m and 5 m respectively.

1. Choose your option
2. Mark your choice in the box below
3. Check your **order code:**

Easergy P3	**L30**						-		**A**			**A**	-			**A**	**A**	
Slot numbers		**1**	**2**	**3**	**4**	**5**	-	**6**	**7**	**8**	**9**	**10**						

Easergy P3 Advanced

Easergy P3M30 configuration

	M30	**Application**
		M30 Motor protection relay
1		**Nominal Supply Voltage [V]**
		C Power C 110 - 230 V (80 .. 265 Vac/dc, 5 x DO heavy duty, A1, SF)
		D Power D 24 - 48 V (18 .. 60 Vdc, 5 x DO heavy duty, A1, SF)
2		**I/O Card I**
		G 6DI+4DO (6 x DI, 4 x DO)
		B 3BIO+2Arc (3 x BI/BO, 2 x Arc point sensor, T2, T3, T4)
		C F2BIO+1Arc (Fibre 2 x BI/BO, 1 x Arc loop sensor, T2, T3, T4)
3		**I/O Card II** (1
		A None
		G 6DI+4DO (6 x DI, 4 x DO)
		H 6DI+4DO (6 x DI, 4 x DO(NC))
		I 10DI (10 x DI)
4		**I/O Card III** (1 (2
		A None
		G 6DI+4DO (6 x DI, 4 x DO)
		H 6DI+4DO (6 x DI, 4 x DO(NC))
		I 10DI (10 x DI)
5		**I/O Card IV** (2
		A None
		D 2IGBT (2 x IGBT High speed outputs), excludes I/O Card III, slot 4
		G 6DI+4DO (6 x DI, 4 x DO)
		H 6DI+4DO (6 x DI, 4 x DO(NC))
		I 10DI (10 x DI)
6		**Option card I**
		A None
		D 4Arc (4 x Arc sensor)
		K RS232 (RS232)
7	A	**Future option**
		A None
8		**Analog measurement card (See application)**
		E 3L(5/1A) + 2Io(5/1A+1/0,2A) + 4U
		F 3L(1A) + 2Io(5/1A+1/0.2A) + 4U
		M 3LPCT + 2Io(5/1A+1/0,2A) + 5LPVT (3
		1 3L(5/1A) + 2Io (5/1A+1/0,2A) ringlug + 4U
		2 3L(1A) + 2Io (5/1A+1/0.2A) ringlug + 4U
9		**Communication interface I**
		A None
		B RS232 (RS232, IRIG-B)
		C RS232+RJ (RS232, IRIG-B + Ethernet RJ-45 100 Mbs)
		D RS232+LC (RS232, IRIG-B + Ethernet LC 100 Mbs)
		E 2xRS485 (2-wire)
		F RS485+RJ (RS485 2-wire + Ethernet RJ-45 100Mbs)
		G RS485+LC (RS485 2-wire + Ethernet LC 100Mbs)
		N 2xRJ (Ethernet RJ 100 Mbs, RSTP)
		O 2xLC (Ethernet LC 100 Mbs, RSTP)
		P PP (Plastic / Plastic serial fibre)
		R GG (Glass / Glass serial fibre)
10	A	**Reserved**
		A Reserved
		Display type
		B 128x128 (128 x 128 LCD matrix)
		C 128x128Ext (128 x 128 LCD matrix, detachable) (4
		Nominal Digital Input voltage (voltage withstand)
		A 24 Vdc/ac, (255 Vac/dc)
		B 110 Vdc/ac, (255 Vac/dc)
		C 220 Vdc/ac, (255 Vac/dc)
	A	**Product version**
		A Version 2.1
	A	**Future option**
		A None
		Region
		A English, IEC
		B English, ANSI
		C Chinese
		R Russia

(1 If Slot 3 = A then Slot 4=A
If Slot 3 = I then Slot 4=A or I

(2 If Slot 5 = D then Slot 4=A
If Slot 4 = A then Slot 5=A
If Slot 4 = I then Slot 5=A or I

(3 Contact us for availability

(4 By default cable length is 2 m. In case other length is needed order separately VX001-1, VX001-3 or VX001-5 for 1 m, 3 m and 5 m respectively.

1. Choose your option
2. Mark your choice in the box below
3. Check your **order code:**

Easergy P3	**M30**						-		**A**			**A**	-			**A**	**A**	
Slot numbers		**1**	**2**	**3**	**4**	**5**	-	**6**	**7**	**8**	**9**	**10**						

Easergy P3 Advanced

Easergy P3M32 configuration

	M32	**Application**
		M32 Motor protection relay with differential protection
1		**Nominal Supply Voltage [V]**
		C Power C 110 - 230 V (80 .. 265 Vac/dc, 5 x DO heavy duty, A1, SF)
		D Power D 24 - 48 V (18 .. 60 Vdc, 5 x DO heavy duty, A1, SF)
2		**I/O Card I**
		G 6DI+4DO (6 x DI, 4 x DO)
		B 3BIO+2Arc (3 x BI/BO, 2 x Arc point sensor, T2, T3, T4)
		C F2BIO+1Arc (Fibre 2 x BI/BO, 1 x Arc loop sensor, T2, T3, T4)
3		**I/O Card II**
		A None
		G 6DI+4DO (6 x DI, 4 x DO)
		H 6DI+4DO (6 x DI, 4 x DO(NC))
		I 10DI (10 x DI)
4		**I/O Card III**
		T 3xI (5/1A) + Io (5/1A) for motor differential protection
		1 3xI (5/1A) ringlug + Io (5/1A) for generator differential protection
5	A	**I/O Card IV**
		A None
6		**Option card I**
		A None
		D 4Arc (4 x Arc sensor)
		K RS232 (RS232)
7	A	**Future option**
		A None
8		**Analog measurement card (See application)**
		E 3L(5/1A) + 2Io(5/1A+1/0,2A) + 4U
		F 3L(1A) + 2Io(5/1A+1/0.2A) + 4U
		1 3L(5/1A) + 2Io (5/1A+1/0,2A) ringlug + 4U
		2 3L(1A) + 2Io (5/1A+1/0.2A) ringlug + 4U
9		**Communication interface I**
		A None
		B RS232 (RS232, IRIG-B)
		C RS232+RJ (RS232, IRIG-B + Ethernet RJ-45 100 Mbs)
		D RS232+LC (RS232, IRIG-B + Ethernet LC 100 Mbs)
		E 2xRS485 (2-wire)
		F RS485+RJ (RS485 2-wire + Ethernet RJ-45 100Mbs)
		G RS485+LC (RS485 2-wire + Ethernet LC 100Mbs)
		N 2xRJ (Ethernet RJ 100 Mbs, RSTP)
		O 2xLC (Ethernet LC 100 Mbs, RSTP)
		P PP (Plastic / Plastic serial fibre)
		R GG (Glass / Glass serial fibre)
10	A	**Reserved**
		A Reserved
		Display type
		B 128x128 (128 x 128 LCD matrix)
		C 128x128Ext (128 x 128 LCD matrix, detachable) (1
		Nominal Digital Input voltage (voltage withstand)
		A 24 Vdc/ac, (255 Vac/dc)
		B 110 Vdc/ac, (255 Vac/dc)
		C 220 Vdc/ac, (255 Vac/dc)
	A	**Product version**
		A Version 2.1
	A	**Future option**
		A None
		Region
		A English, IEC
		B English, ANSI
		C Chinese
		R Russia

(1 By default cable length is 2 m. In case other length is needed order separately VX001-1, VX001-3 or VX001-5 for 1 m, 3 m and 5 m respectively.

1. Choose your option
2. Mark your choice in the box below
3. Check your **order code:**

Easergy P3	M32					A	-		A			A	-			A	A	
Slot numbers		1	2	3	4	5	-	6	7	8	9	10						

Easergy P3 Advanced

Easergy P3T32 configuration

	T32	**Application**
		T32 Transformer protection relay with differential protection
1		**Nominal Supply Voltage [V]**
		C Power C 110 - 230 V (80 .. 265 Vac/dc, 5 x DO heavy duty, A1, SF)
		D Power D 24 - 48 V (18 .. 60 Vdc, 5 x DO heavy duty, A1, SF)
2		**I/O Card I**
		G 6DI+4DO (6 x DI, 4 x DO)
		B 3BIO+2Arc (3 x BI/BO, 2 x Arc point sensor, T2, T3, T4)
		C F2BIO+1Arc (Fibre 2 x BI/BO, 1 x Arc loop sensor, T2, T3, T4)
3		**I/O Card II**
		A None
		G 6DI+4DO (6 x DI, 4 x DO)
		H 6DI+4DO (6 x DI, 4 x DO(NC))
		I 10DI (10 x DI)
4		**I/O Card III**
		T 3xI (5/1A) + Io (5/1A) for transformer differential protection
		1 3xI (5/1A) ringlug + Io (5/1A) for generator differential protection
5	A	**I/O Card IV**
		A None
6		**Option card I**
		A None
		D 4Arc (4 x Arc sensor)
		K RS232 (RS232)
7	A	**Future option**
		A None
8		**Analog measurement card (See application)**
		E 3L(5/1A) + 2Io(5/1A+1/0,2A) + 4U
		F 3L(1A) + 2Io(5/1A+1/0.2A) + 4U
		1 3L(5/1A) + 2Io (5/1A+1/0,2A) ringlug + 4U
		2 3L(1A) + 2Io (5/1A+1/0.2A) ringlug + 4U
9		**Communication interface I**
		A None
		B RS232 (RS232, IRIG-B)
		C RS232+RJ (RS232, IRIG-B + Ethernet RJ-45 100 Mbs)
		D RS232+LC (RS232, IRIG-B + Ethernet LC 100 Mbs)
		E 2xRS485 (2-wire)
		F RS485+RJ (RS485 2-wire + Ethernet RJ-45 100Mbs)
		G RS485+LC (RS485 2-wire + Ethernet LC 100Mbs)
		N 2xRJ (Ethernet RJ 100 Mbs, RSTP)
		O 2xLC (Ethernet LC 100 Mbs, RSTP)
		P PP (Plastic / Plastic serial fibre)
		R GG (Glass / Glass serial fibre)
10	A	**Reserved**
		A Reserved
		Display type
		B 128x128 (128 x 128 LCD matrix)
		C 128x128Ext (128 x 128 LCD matrix, detachable) (1
		Nominal Digital Input voltage (voltage withstand)
		A 24 Vdc/ac, (255 Vac/dc)
		B 110 Vdc/ac, (255 Vac/dc)
		C 220 Vdc/ac, (255 Vac/dc)
	A	**Product version**
		A Version 2.1
	A	**Future option**
		A None
		Region
		A English, IEC
		B English, ANSI
		C Chinese
		R Russia

(1 By default cable length is 2 m. In case other length is needed order separately VX001-1, VX001-3 or VX001-5 for 1 m, 3 m and 5 m respectively.

1. Choose your option
2. Mark your choice in the box below
3. Check your **order code:**

Easergy P3	T32					A	-		A			A	-			A	A	
Slot numbers		1	2	3	4	5	-	6	7	8	9	10						

Easergy P3 Advanced

Easergy P3G30 configuration

	G30	**Application**
		G30 Generator protection
1		**Nominal Supply Voltage [V]**
		C Power C 110 - 230 V (80 .. 265 Vac/dc, 5 x DO heavy duty, A1, SF)
		D Power D 24 - 48 V (18 .. 60 Vdc, 5 x DO heavy duty, A1, SF)
2		**I/O Card I**
		G 6DI+4DO (6 x DI, 4 x DO)
		B 3BIO+2Arc (3 x BI/BO, 2 x Arc point sensor, T2, T3, T4)
		C F2BIO+1Arc (Fibre 2 x BI/BO, 1 x Arc loop sensor, T2, T3, T4)
3		**I/O Card II** (1
		A None
		G 6DI+4DO (6 x DI, 4 x DO)
		H 6DI+4DO (6 x DI, 4 x DO(NC))
		I 10DI (10 x DI)
4		**I/O Card III** (1 (2
		A None
		G 6DI+4DO (6 x DI, 4 x DO)
		H 6DI+4DO (6 x DI, 4 x DO(NC))
		I 10DI (10 x DI)
5		**I/O Card IV** (2
		A None
		D 2IGBT (2 x IGBT High speed outputs), excludes I/O Card III, slot 4
		G 6DI+4DO (6 x DI, 4 x DO)
		H 6DI+4DO (6 x DI, 4 x DO(NC))
		I 10DI (10 x DI)
6		**Option card I**
		A None
		D 4Arc (4 x Arc sensor)
		K RS232 (RS232)
7	A	**Future option**
		A None
8		**Analog measurement card (See application)**
		E 3L(5/1A) + 2Io(5/1A+1/0,2A) + 4U
		F 3L(1A) + 2Io(5/1A+1/0.2A) + 4U
		M 3LPCT + 2Io(5/1A+1/0,2A) + 5LPVT (3
		1 3L(5/1A) + 2Io (5/1A+1/0,2A) ringlug + 4U
		2 3L(1A) + 2Io (5/1A+1/0.2A) ringlug + 4U
9		**Communication interface I**
		A None
		B RS232 (RS232, IRIG-B)
		C RS232+RJ (RS232, IRIG-B + Ethernet RJ-45 100 Mbs)
		D RS232+LC (RS232, IRIG-B + Ethernet LC 100 Mbs)
		E 2xRS485 (2-wire)
		F RS485+RJ (RS485 2-wire + Ethernet RJ-45 100Mbs)
		G RS485+LC (RS485 2-wire + Ethernet LC 100Mbs)
		N 2xRJ (Ethernet RJ 100 Mbs, RSTP)
		O 2xLC (Ethernet LC 100 Mbs, RSTP)
		P PP (Plastic / Plastic serial fibre)
		R GG (Glass / Glass serial fibre)
10	A	**Reserved**
		A Reserved
		Display type
		B 128x128 (128 x 128 LCD matrix)
		C 128x128Ext (128 x 128 LCD matrix, detachable) (4
		Nominal Digital Input voltage (voltage withstand)
		A 24 Vdc/ac, (255 Vac/dc)
		B 110 Vdc/ac, (255 Vac/dc)
		C 220 Vdc/ac, (255 Vac/dc)
	A	**Product version**
		A Version 2.1
	A	**Future option**
		A None
		Region
		A English, IEC
		B English, ANSI
		C Chinese
		R Russia

(1 If Slot 3 = A then Slot 4=A
If Slot 3 = I then Slot 4=A or I

(2 If Slot 5 = D then Slot 4=A
If Slot 4 = A then Slot 5=A
If Slot 4 = I then Slot 5=A or I

(3 Contact us for availability

(4 By default cable length is 2 m. In case other length is needed order separately VX001-1, VX001-3 or VX001-5 for 1 m, 3 m and 5 m respectively.

1. Choose your option
2. Mark your choice in the box below
3. Check your **order code:**

Easergy P3	G30						-		A			A	-			A	A	
Slot numbers		1	2	3	4	5	-	6	7	8	9	10						

Easergy P3 Advanced

Easergy P3G32 configuration

	G32	**Application**
		G32 Generator protection with differential protection
1		**Nominal Supply Voltage [V]**
		C Power C 110 - 230 V (80 .. 265 Vac/dc, 5 x DO heavy duty, A1, SF)
		D Power D 24 - 48 V (18 .. 60 Vdc, 5 x DO heavy duty, A1, SF)
2		**I/O Card I**
		G 6DI+4DO (6 x DI, 4 x DO)
		B 3BIO+2Arc (3 x BI/BO, 2 x Arc point sensor, T2, T3, T4)
		C F2BIO+1Arc (Fibre 2 x BI/BO, 1 x Arc loop sensor, T2, T3, T4)
3		**I/O Card II**
		A None
		G 6DI+4DO (6 x DI, 4 x DO)
		H 6DI+4DO (6 x DI, 4 x DO(NC))
		I 10DI (10 x DI)
4		**I/O Card III**
		T 3xI (5/1A) + Io (5/1A) for generator differential protection
		1 3xI (5/1A) ringlug + Io (5/1A) for generator differential protection
5	A	**I/O Card IV**
		A None
6		**Option card I**
		A None
		D 4Arc (4 x Arc sensor)
		K RS232 (RS232)
7	A	**Future option**
		A None
8		**Analog measurement card (See application)**
		E 3L(5/1A) + 2Io(5/1A+1/0,2A) + 4U
		F 3L(1A) + 2Io(5/1A+1/0.2A) + 4U
		1 3L(5/1A) + 2Io (5/1A+1/0,2A) ringlug + 4U
		2 3L(1A) + 2Io (5/1A+1/0.2A) ringlug + 4U
9		**Communication interface I**
		A None
		B RS232 (RS232, IRIG-B)
		C RS232+RJ (RS232, IRIG-B + Ethernet RJ-45 100 Mbs)
		D RS232+LC (RS232, IRIG-B + Ethernet LC 100 Mbs)
		E 2xRS485 (2-wire)
		F RS485+RJ (RS485 2-wire + Ethernet RJ-45 100Mbs)
		G RS485+LC (RS485 2-wire + Ethernet LC 100Mbs)
		N 2xRJ (Ethernet RJ 100 Mbs, RSTP)
		O 2xLC (Ethernet LC 100 Mbs, RSTP)
		P PP (Plastic / Plastic serial fibre)
		R GG (Glass / Glass serial fibre)
10	A	**Reserved**
		A Reserved
		Display type
		B 128x128 (128 x 128 LCD matrix)
		C 128x128Ext (128 x 128 LCD matrix, detachable) (1
		Nominal Digital Input voltage (voltage withstand)
		A 24 Vdc/ac, (255 Vac/dc)
		B 110 Vdc/ac, (255 Vac/dc)
		C 220 Vdc/ac, (255 Vac/dc)
	A	**Product version**
		A Version 2.1
	A	**Future option**
		A None
		Region
		A English, IEC
		B English, ANSI
		C Chinese
		R Russia

(1 By default cable length is 2 m. In case other length is needed order separately VX001-1, VX001-3 or VX001-5 for 1 m, 3 m and 5 m respectively.

1. Choose your option
2. Mark your choice in the box below
3. Check your **order code:**

Easergy P3	G32					A	-		A			A	-			A	A	
Slot numbers		1	2	3	4	5	-	6	7	8	9	10						

Accessories

Arc point sensors

Comm. Ref	Description		Used on
REL52801	VA1DA-20	Arc sensor, 20m	P3F3x / P3M3x P3T3x / P3G3x
REL52802	VA1DA-20S-HF	Arc sensor, 20m, shielded, halogen free	
REL52803	VA1DA-20S	Arc sensor, 20m, shielded	
REL52804	VA1DA-6	Arc sensor, 6m connect cable	
REL52805	VA1DA-6S-HF	Arc sensor, 6m, halogen free	
REL52806	VA1DA-6S	Arc sensor, 6m, shielded	
REL52807	VA1EH-20	Arc sensor, 20m pipe sensor	
REL52808	VA1EH-20S	Arc sensor, 20m pipe sensor, shielded	
REL52809	VA1EH-6	Arc sensor, 6m pipe sensor	
REL52810	VA1EH-6S	Arc sensor, 6m pipe sensor, shielded	

RTD Modules

Comm. Ref	Description		Used on
REL52811	VIO12AASE	RTD module, 12pcs RTD inputs, Optical Tx	P3Ux0 / P3F3x P3L3x / P3M3x P3T3x / P3G3x
REL52812	VIO12ABSE	RTD module, 12pcs RTD inputs, RS485	
REL52813	VIO12ACSE	RTD module, 12pcs RTD inputs, mA in/out	
REL52814	VIO12ADSE	RTD module, 12pcs RTD inputs, mA in/out	

Communication Port

Comm. Ref	Description		Used on
REL52815	VPA3CGSE	Profibus interface module PM106585	P3Ux0 / P3F3x P3L3x / P3M3x P3T3x / P3G3x
REL52820	VSE002	RS485 module PM106581	
REL52821	VSE009	DeviceNet module PM106580	

Fiber optic modules

Reference	Description		Used on
REL52816	VSE001-GGSE	Fiber optic module (Glass - Glass) PM106586	P3Ux0 / P3F3x P3L3x / P3M3x P3T3x / P3G3x
REL52817	VSE001-GPSE	Fiber optic module (Glass - Plastic) PM106586	
REL52818	VSE001-PGSE	Fiber optic module (Plastic - Glass) PM106586	
REL52819	VSE001-PPSE	Fiber optic module (Plastic - Plastic) PM106586	

Others accessories

Reference	Description		Used on
REL52822	USB cable	USB programming cable (Easergy Pro)	P3Ux0 / P3F3x P3L3x / P3M3x P3T3x / P3G3x
REL52828	VYX001	Mounting plate for arc sensor Z-shape	
REL52829	VYX002	Mounting plate for arc sensor L-shape	
REL52831	VYX301	VSE00x wall fastening module	
REL52832	VYX695	Raising frame, P3x, 45 mm	P3F3x P3L3x / P3M3x P3T3x / P3G3x
REL52823	VX067	Split cable for COM 1-2 & COM 3-4 ports	
REL52824	VX072	Profibus cable	
REL52838	VX086	P3X (RS232) - COM 1-2 + 3-4 + IRIG B (3xD9)	
REL52834	VYX860	Raising frame, P3U, 45 mm	P3Ux0
REL52833	P3UPSC	P3U panel seal cover	
REL52825	VX082	RS232 - VSE (1xD9) cable	
REL52826	VX083	RS232 - Remote/Ext. (3xD9) cable	
REL52827	VX084	RS232 - VPA 3CG cable (Profibus)	
REL52835	VX085	P3U (RS232) - VSE009 cable	

TOOLS

schneider-electric.com

This international web site allows you to access all the Schneider Electric solutions and product information via:

- Comprehensive descriptions
- Range datasheets
- A download area
- Product selectors

You can also access information dedicated to your business and contact your Schneider Electric country support.

PM103687

Web selector

This site allows you to access the Schneider Electric products in just two clicks via a comprehensive range of datasheets, with direct links to:

- Complete libraries: technical documents, catalogs, FAQs, brochures
- Selection guides from the e-catalog
- Product discovery sites and their animations

You will also find illustrated overviews, news to which you can subscribe, and a list of country contacts

Training

Training allows you to acquire the expertise (installation design, work with power on, etc.) to increase efficiency and improve customer service.

The training catalog includes beginner's courses in electrical distribution, knowledge of MV and LV switchgear, operation and maintenance of installations, and design of LV installations to give a few examples.

Life Is On | Schneider Electric™

Green Premium™ ecolabel product - Sustainable performance, by design

Schneider Electric Industries SAS
35, rue Joseph Monier - CS 30323
F92506 Rueil-Malmaison Cedex

© 2019 Schneider Electric. All Rights Reserved. Life Is On Schneider Electric is a trademark and the property of Schneider Electric SE, its subsidiaries and affiliated companies.
• NRJCAT17764EN - July 2019