Medium Voltage Distribution

Vacuum Circuit Breakers 12-24 kV

Merlin Gerin

Evolis 24 withdrawable version

EXE 12 withdrawable version

Catalogue

2019

Schneider Electric

General Presentation

As a specialist in breaking technologies, Schneider Electric took naturally an interest in vacuum breaking techniques.
A major R&D investment was made to develop and engineer Evolis, providing customers with the very best of vacuum technology.

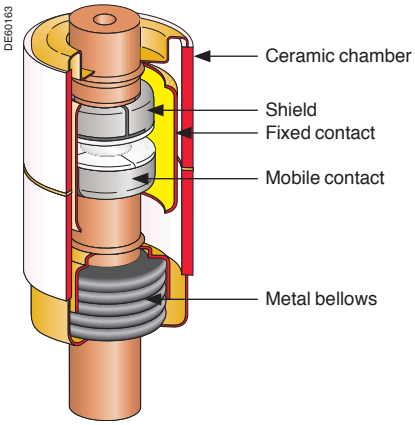

Fig. 1: vacuum interrupter components (24 kV internal coil type)

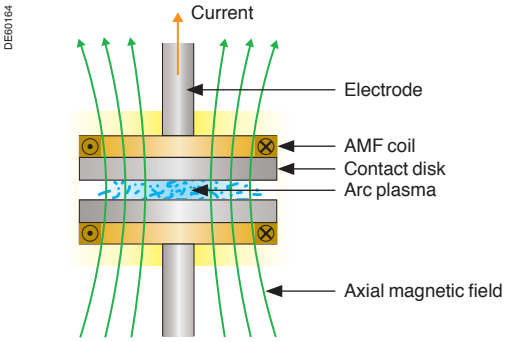

Fig. 2: cross-section of AMF contact

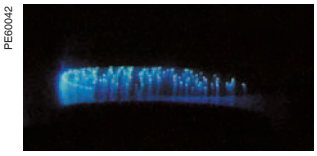

Fig. 3: diffuse vacuum arc AMF technology

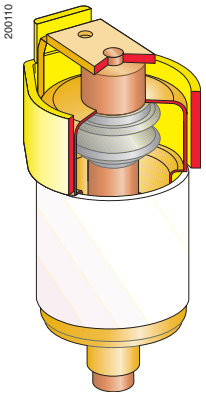

Fig. 4: 12 kV/17.5kV external coil type interrupter

Make-up of a vacuum interrupter

Vacuum interrupters basically have two electrical contacts (fig.1), one fixed and the other mobile, and a sealed enclosure. The latter enables a high level of vacuum to be maintained inside the interrupter (less than 10^{-7} bar) to provide insulation between the open contacts.

The dielectric strength of the vacuum allows the contact-to-contact distance to be reduced. This short distance together with the low opening speed allow the use of a low energy control mechanism. A metal clusters provides the link between the mobile contact and the enclosure.

In order to keep the vacuum level required for the correct operation of the interrupter for 30 years, the enclosure must be perfectly sealed, and the various components have to be fully degased. This is achieved by:

- choosing materials that are specifically selected for this application (metals and ceramics)
- choosing an appropriate assembly process (vacuum, high temperature brazing)
- the use of a “getter” material to absorb the residual gas.

Current breaking in a vacuum interrupter

In vacuum breaking, the electrical arc generated on separation of the contacts is made up of a plasma of metal vapors produced by the vaporization of the contact material.

At low values of current, these vapors very quickly condense on the shield and contacts when the arc disappears, thus allowing:

- the vacuum to be re-established
- a contact-to-contact dielectric strength to be restored that is greater than
- the recovery voltage: breaking is then complete.

At high currents, the electrical arc in the vacuum switches to a concentrated mode which causes high, localized temperature rises on the contacts. The existence of these hot spots is detrimental to the quick restoring of the dielectric strength.
Two techniques can be used in order to avoid this stagnation of the static concentrated arc:

- the so called RMF (Radial Magnetic Field) technique, involves rotating the arc thanks to an electromagnetic effect generated by a radial magnetic field; this therefore limits contact erosion.
- a more recent technique called AMF (Axial Magnetic Field) involves applying an axial magnetic field parallel to the axis of the two contacts (fig. 2) which allows a diffuse arc to be maintained (fig. 3) even at high current values. The arc energy is spread over the whole contact surface area, therefore causing very low levels of erosion.
- Schneider Electric has chosen this last technique for the Evolis range.

AMF technology

Evolis circuit breakers use AMF type vacuum interrupters.
According to technical and economic optimization considerations, the axial magnetic field is generated:

- either by a coil outside of the interrupter (fig. 4), for rated voltages up to 17.5 kV
- or by a coil integrated in the interrupter contact structure (fig. 1), for the 24 kV voltage level.

In both cases the AMF vacuum interrupters feature low arc voltages (Uarc of around 50 V) and maximum usage of the contact surface for very low contact erosion.

The advantages provided

The above choices provide customers with the following advantages in MV circuit breaker applications:

- simple and compact vacuum interrupters
- CuCr materials as main contacts in the interrupter for lower chopping current and low surge during breaking
- high electrical endurance meaning that there is no need for contact wear inspection in normal network protection applications including highly disturbed overhead line feeders.

Common Characteristics according to IEC 62271-100				
rated frequency		**fr**	(Hz)	50 & 60
short-time withstand current		**Ik** for tk = 3s	(kA) rms	Ik = Isc
rated peak withstand current		**Ip**	peak (kA)	Ip = 2.5 & 2.6 Ik
rated short circuit making current			peak (kA)	= 2.5 & 2.6 Isc
operating sequence				O - 3 mn - CO - 3 mn - CO
				O - 0.3 s - CO - 3 mn - CO
				O - 0.3 s - CO - 15 s - CO
operating times	opening		ms	< 50
	breaking		ms	< 65
	closing		ms	< 70
mechanical endurance	class			M2
	number of operations			10,000 (30,000 upon request)
electrical endurance	class			E2
	number of operations		16 kA	100
			25 kA	100
			31.5 & 40 kA	100
capacitive current breaking				C2
Humidity:				
average relative humidity	24-hour period			< 95%
	1 month			< 90%

Electrical Characteristics according to IEC 62271-100				
circuit breaker		EasyPact EXE 122512A1B 1250	Evolis 630	Evolis 630/1250
rated voltage★1	Ur (kV) rms	12	24	24
power frequency withstand (50/60Hz 1min)	Ud (kV) rms	28	50	50
lightning impulse withstand	Up (kV) peak	75	125	125
rated short-circuit breaking current★2	Isc (kA) rms / 3s	25	16	25
rated normal current (-25°C +40°C)	Ir (A) rms	1250	630	630/1250
climatic version	-25°C +40°C	■	■	■
Installation and Connections				
phase distance between poles (mm)		145	250	250
dimensions C.B with cradle (mm)	width (W)	600	900	900
	depth (D) max. with ES	1090	1472	1472
	height (H)	940	1200	1200
mass C.B. with cradle (kg)		168	267	268

★1 17.5kV is also available, please contact us for more information.
★2 Three-phase breaking capacity = Ur x Isc x $\sqrt{3}$ (MVA), Ex: 12kV x 25kA x $\sqrt{3}$ = 520MVA.

Function Description

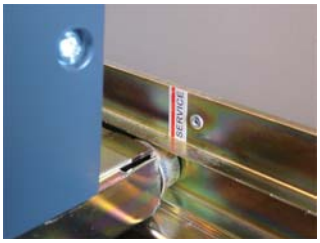

Fig.1: service position

Fig.2: test position


Fig.3: push-to-unclok
racking in & out mechanism


Fig.4: epoxy casting bushing &
earthing switch (option)

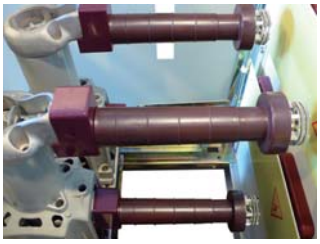
Fig.5: insulation arm and
cluster connecter

Composition

■ The “racking in” function is provided by:
☐ the racking truck supporting the circuit-breaker (mobile part),
☐ the cradle including the bushings (fixed part),
☐ the LV plug.
■ The allowable voltage range for all electrical operations of the circuit-breaker is within 85% ~ 110%Un.
■ auxiliary contacts for 12kV: 5NO+4NC (4CHG+1NO) or 6NO+6NC (6CHG) option
■ auxiliary contacts for 24kV: 5NO+5NC (4NO+4NC+1CHG)
■ antipumping relay
■ operation counter

Operating Procedure

■ The circuit-breaker moves through 2 stable positions:
☐ service position:
circuit-breaker racked in and locked in place; low voltage plug connected.
☐ test position:
circuit-breaker racked out and locked in place; low voltage plug connected.

Safety Functions

A propulsive system combined with a screw-shaft makes racking in and racking out easier.
■ **Interlocking**
In accordance with IEC standards 62271-100 and 62271-200, the following interlocking is provided:
☐ racking in or out is impossible unless the circuit-breaker is in the open position.
☐ circuit-breaker CANNOT be withdrawn when the main contacts are in “closed” position.
☐ the main contacts of the circuit-breaker are forbidden to be closed when:
a. circuit-breaker is in the process of being withdrawn or led-in.
b. circuit-breaker is between the “test” and “service” positions.
c. circuit-breaker is between the “test” and “disconnedted” positions.
☐ racking in or out is impossible during breaker’s charging procedure.
■ **Metal-clad enclosed cradle** with epoxy casting bushing eusures the safest construction.
■ **Earthing** is achieved throughout the whole racking in operation by means of the wheels of the racking truck.
■ **Protective shutters** on the cradle prevent access to the racking fingers when the device is extracted (protection index: IP2X).
■ For maintenance or test purposes, it is possible to:
☐ padlock the shutters in the closed or open position.
■ **Earthing Switch (option)**
It can be fixed on the cradle, allowing proper interlocking between the circuit-breaker and the earthing switch.
☐ auxiliary contacts for earthing switch, cctivated when earthing switch is in open or closed position.

Optional Parts

■ Position Contact (2 or 4 racked in/out), activated when circuit-breaker is in the “test” or “service” position.
■ Condenser Tripping Device (CTD, 2000μF) providing DC power for the unit to trip when encountering power failure.
■ Communication Output (RS485 RTU) monitoring operating conditions and positions of circuit-breaker and earthing switch, can also provide remote control of circuit-breaker
■ Earthing Switch
■ Interlock Protection Mechanism (when interlocked with another breaker):
locking the breaker in “test” or “disconnected” position and forbidding it to be closed.
■ Under Voltage Release
■ Key Locking Device (OFF position locking, forbidden to rack in/out the cradle)
■ Interlock and Padlock device (pushbutton locking, forbidden to close or open the breaker)
■ Auto-Discharge Function: the spring of the circuit-breaker operating mechanism is automatically discharged when the circuit-breaker is extracted from the cubicle. This feature avoids unexpected closing of the circuit-breaker.
■ Arc Protection Relay, faster response to trip CB at the beginning of fault arc generation.

★The cradle is developed by TOYO TECHNICAL CO. LTD., an official distributor of Schneider Electric.

DE57612EN

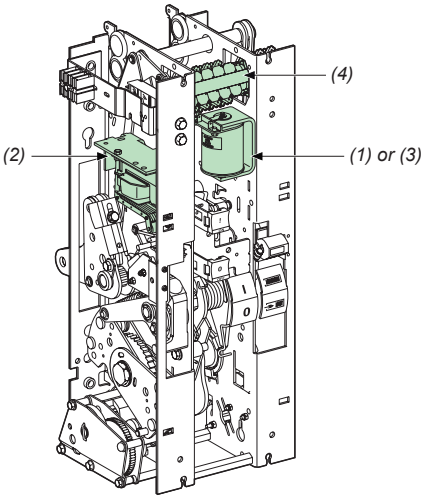

Operating mechanism

Composition

The opening circuit can be produced using the following components:

- Shunt opening release (on energizing) (YO1)
- second shunt opening release (on energizing) (YO2)
- undervoltage release (YM)
- low energy release (Mitop).

Shunt opening release (MX1 / YO1 and MX2 / YO2)

Energizing this release causes instant opening of the circuit breaker.

Characteristics			
Power supply	50/60Hz	MX1/MX2 (12KV)	100...130 Vdc/ac, 200...250 Vdc/ac
		YO1/YO2 (24KV)	110/125 Vdc, 220Vdc, 220Vac
Threshold		V AC	0.85 to 1.1 Ur
		V DC	0.7 to 1.1 Ur
Consumption		V AC	160 VA
		V DC	50 W

DE58092

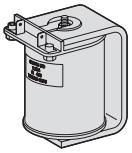

Shunt opening release (1)

Undervoltage release (MN / YM)

This release unit causes the systematic opening of the circuit breaker when its supply voltage drops below a value less than 35% of the rated voltage, even if this drop is slow and gradual. It can open the circuit breaker between 35% and 70% of its rated voltage. If the release unit is not supplied power, manual or electrical closing of the circuit breaker is impossible. Closing of the circuit breaker is possible when the supply voltage of the release unit reaches 85% of its rated voltage.

Characteristics					
Power supply		MN (12KV)	100...130 Vdc/ac, 200...250 Vdc/ac		
		YM (24KV)	110/125 Vdc, 220Vdc, 220Vac		
Threshold		Opening	0.35 to 0.7 Ur		
		Closing	0.85 Ur		
Consumption	Triggering	200 (for 200ms) VA or W	/	V AC	400 VA
		--	/	V DC	100 W
	Latched	4.5 VA or W	/	V AC	100 VA
		--	/	V DC	10 W

DE58093

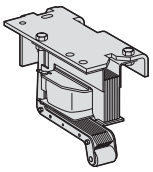

Undervoltage release (2)

Low energy release (Mitop)

This release includes a low consumption unit and is specifically used with the Sepam 100LA self-powered relay (“REFLEX MODULE”), or the VIP relay.

Characteristics	
Power supply	Direct current
Threshold	0.6 A < I < 3 A

Any tripping due to the Mitop release unit is momentarily indicated by an SDE type changeover contact (option).

DE58094

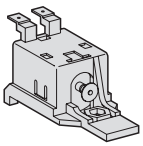

Low energy release (3)

“Open/closed” auxiliary contacts

The number of contacts available depends on the options chosen on the operating mechanism. (see wiring diagrams)

Contact characteristics			
Rated current			10A
Breaking capacity	AC	220V (cosø ≥ 0.3)	1A
	DC	110/220V (L/R ≤ 0.02s)	0.3A

DE58098

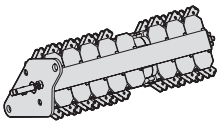

Auxiliary contacts (4)

DE57604

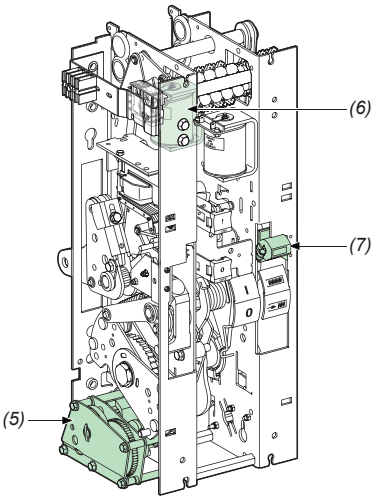

Operating mechanism

Function
Remote control enables the remote opening and closing of the circuit breaker.

Composition
The remote control mechanism comprises:
- an electrical motor with gearing (MCH/M)
- a shunt closing release (YF) combined with an anti-pumping device
- an operation counter.

Electrical motor with gearing (MCH / M)
The electrical motor carries out the automatic rearming of the stored energy unit as soon as the circuit breaker is closed. This allows the instant reclosing of the device after opening. The arming lever is only used as a backup operating mechanism in the case of the absence of the auxiliary power supply.
The M3 contact indicates the end of arming operations.

Characteristics		
Power supply	MCH (12kV)	100...125 Vdc, 100...130 Vac, 200...240Vac
	M (24kV)	110...127 Vdc/ac, 220...250Vdc/ac
Threshold	V AC/V DC	0.85 to 1.1Ur
Consumption	V AC	180 VA (12kV), 380 VA (24kV)
	V DC	180 W (12kV), 380 W (24kV)

DE58096

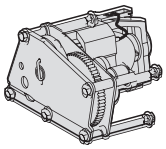

Electrical motor and gearing (5)

Shunt closing release (XF / YF)
This release allows the remote closing of the circuit breaker when the operating mechanism is armed.

Characteristics		
Power supply	XF (12KV)	100...130 Vdc/ac, 200...250 Vdc/ac
	YF (24KV)	110/125 Vdc, 220Vdc, 220Vac
Threshold	V AC	0.85 to 1.1 Ur
	V DC	0.85 to 1.1 Ur
Consumption	V AC	160 VA
	V DC	50 W

The shunt closing release is combined with an anti-pumping relay that enables priority to be given to opening in the case of a permanent closing order. This thus avoids the device being caught in an uncontrolled opening-closing cycle.

DE58092

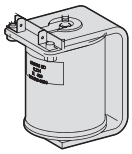

Shunt closing release (6)

DE58097

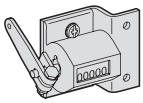

Operation counter (7)

Operation counter
The operation counter is visible on the front panel.
It displays the number of switching cycles (CO) that the device has carried out.

Condenser tripping device (CTD)

Condenser tripping device
Condenser tripping device (CTD, 2000µF) providing DC power for the unit to trip when encountering power failure.

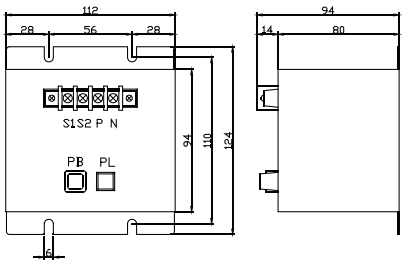

Dimensions & fixing holes of CTD

Dimensions (Bushing Type)

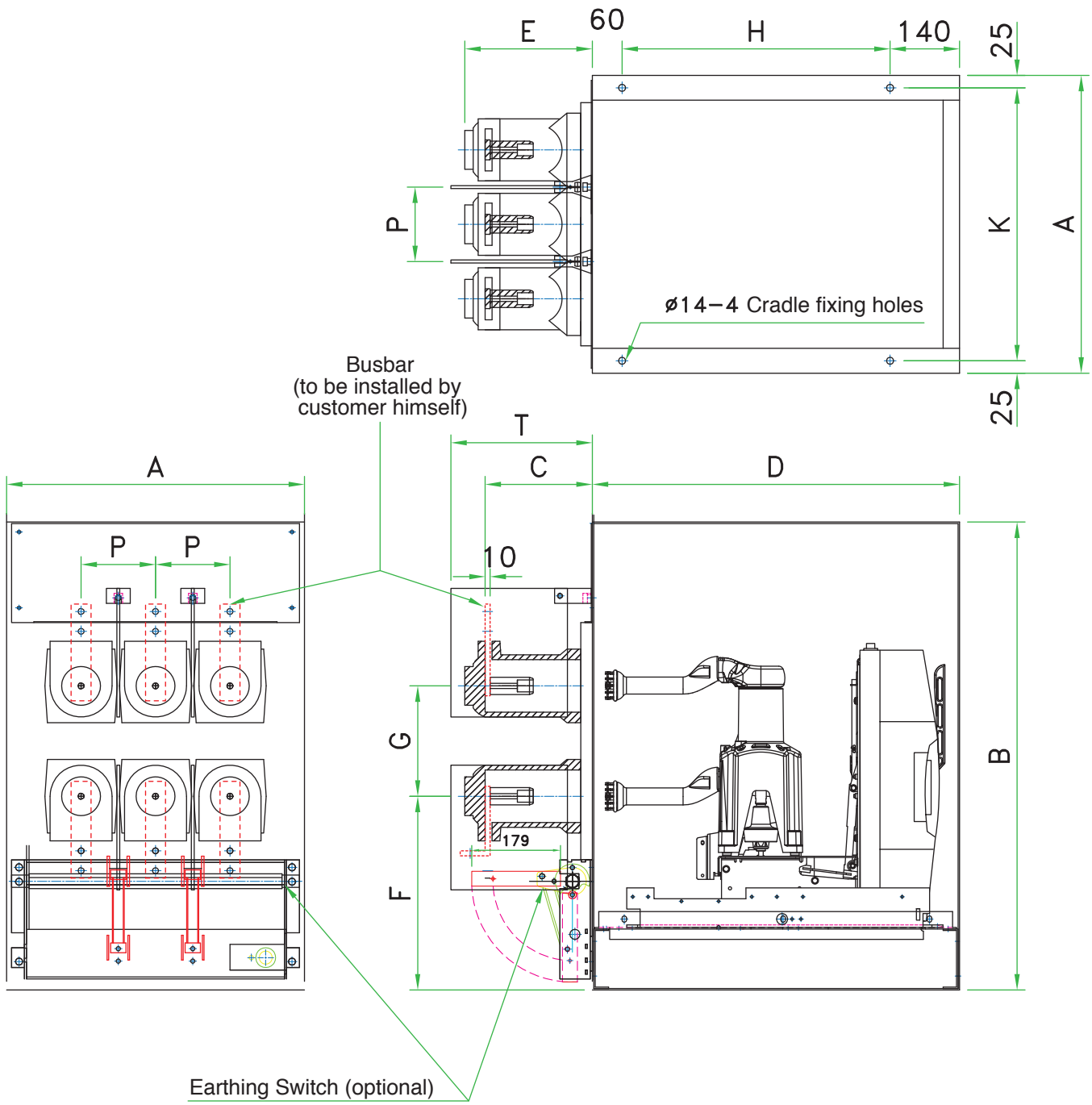

Cradle Type	Voltage (kV)	Current (A)	A	B	C	D	E	F	G	H	K	P	T
MVCBE12	12	630 / 1250	600	940	210	740	250	390	205	540	550	145	285
MVCBE12+ES													350
MVCBE24	24	630 / 1250	900	1188	268	1030	321	519	318	830	850	250	350
MVCBE24+ES													400

unit: mm

★The cradle is developed by TOYO TECHNICAL CO. LTD., an official distributor of Schneider Electric.

Wiring Diagrams

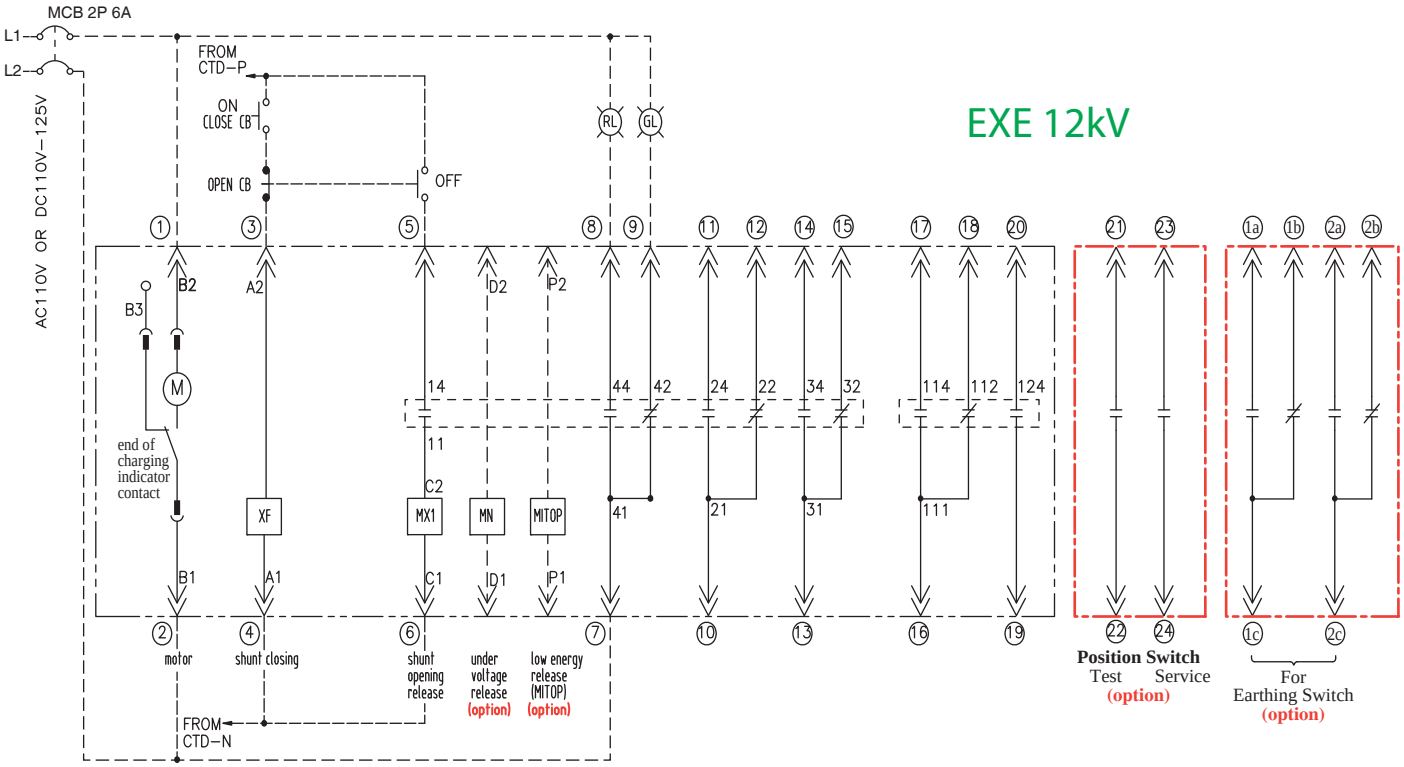

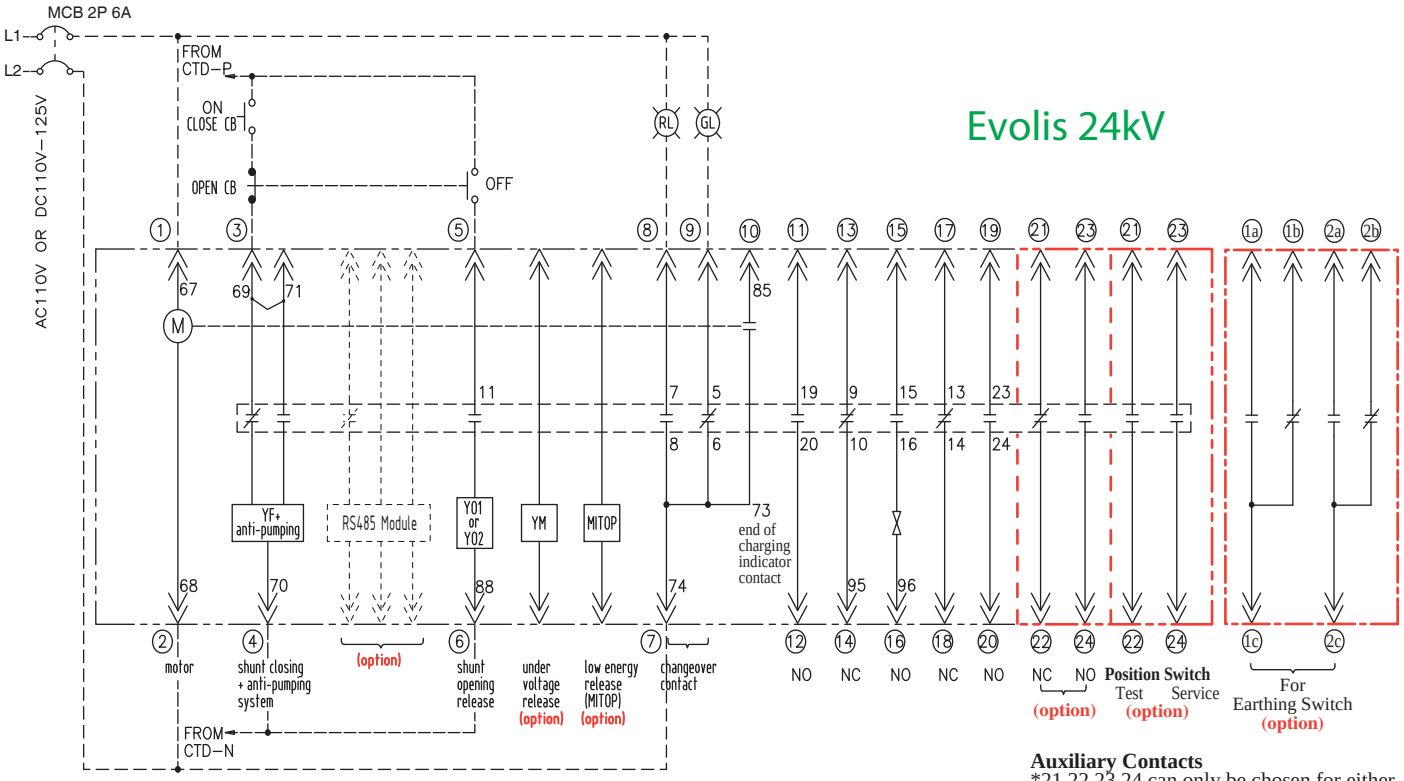

Schneider Electric 施耐德電機授權經銷商
東技企業股份有限公司
普得企業股份有限公司
總公司:台北市內湖區行愛路68號6樓
電　話:(02)8791-8588
傳　真:(02)8791-9588
E-mail:toyotech@ms37.hinet.net
中辦處:(04)2296-9388
高辦處:(07)227-2133
網　址:www.toyotech.com.tw

Aug. 2019